ABB BALDOR RELIANCE

Customer information packet

ZDM3581T

1HP, 1760RPM, 3PH, 60HZ, 143TC, 0520M, TEBC, F1
Class - None
Division - Not Applicable

Copyright © All product information within this document is subject to ABB Motors and Mechanical Inc. copyright © protection, unless otherwise noted.
11/24/2026 7:17:37 AM

Specifications

Enclosure	TEBC
Frame	143TC
Frame Material	Iron
Frequency	60.00 Hz
Haz Area Class and Group	None
Haz Area Division	Not Applicable
Motor Letter Type	Three Phase
Output @ Frequency	1.000 HP @ 60 HZ
Phase	3
Synchronous Speed @ Frequency	1800 RPM @ 60 HZ
Voltage @ Frequency	230.0 V @ 60 HZ
	460.0 V @ 60 HZ
Agency Approvals	CSA
	UR
Ambient Temperature	40 °C
Auxiliary Box	NO AUXILLARY BOX
Auxiliary Box Lead Termination	None
Base Indicator	Rigid
Bearing Grease Type	Polyrex EM (-20F +300F)
Blower	BLOWER
Current @ Voltage	1.630 A @ 460.0 V
	3.200 A @ 208.0 V
	3.260 A @ 230.0 V
Design Code	B
Drip Cover	No Drip Cover
Duty Rating	CONT
Efficiency @ 100% Load	85.5 %
Electrically Isolated Bearing	Not Electrically Isolated
Feedback Device	ENCODER
Front Shaft Indicator	None
Heater Indicator	No Heater
High Voltage Full Load Amps	1.6 a

Part Detail

Revision	D
Type	AC
Mech. spec.	05E535
Base	
Status	PRD/A
Elec. spec.	05WGX508
Layout	05LYE535
Eff. date	09-30-2025
CD Diagram	CD0005
Poles	04
Leads	9#18
Proprietary	False
Created date	07-21-2022

Insulation Class	H
Inverter Code	Inverter Ready
KVA Code	N
Lifting Lugs	Standard Lifting Lugs
Locked Bearing Indicator	Locked Bearing
Max Speed	6000 rpm
Motor Lead Quantity/Wire Size	9 @ 18 AWG
Motor Lead Termination	Flying Leads
Motor Standards	NEMA
Motor Type	0520M
Mounting Arrangement	F1
Number of Poles	4
Overall Length	19.15 IN
Power Factor	67
Product Family	General Purpose
Pulley End Bearing Type	Ball
Pulley Face Code	C-Face
Pulley Shaft Indicator	Standard
Rodent Screen	None
Service Factor	1.00
Shaft Diameter	0.875 IN
Shaft Ground Indicator	No Shaft Grounding
Shaft Rotation	Reversible
Shaft Slinger Indicator	Shaft Slinger
Speed	1760 rpm
Speed Code	Single Speed
Starting Method	Direct on line
Thermal Device - Bearing	None
Thermal Device - Winding	Normally Closed Thermostat
Vibration Sensor Indicator	No Vibration Sensor
Winding Thermal 1	None
Winding Thermal 2	None

Nameplate

NP4539L											
CAT.NO.	ZDM3581T										
SPEC.	05E535X508G2										
FRAME	143TC			**H.P.**	1 TE						
VOLTS	230/460										
MAG. CUR.	2.4/1.2					**F.L. AMPS**	3.26/1.63				
R.P.M.	1760			**R.P.M. MAX**	6000						
HZ.	60		**PH.**	3	**CLASS**	H					
SER.F.	1.00		**DES.**	B	**SL HZ**	1.3					
NEMA NOM. EFF.	85.5		**WK2**	0.144							
BLWR V	115	**PH**	1	**HZ**	60	**AMPS**	.4				
RATING	40C AMB-CONT										
DE	6205	**ODE**	6203								
CC	010A	**SN**									
	1000:1 CT/VT										

AC Induction Motor Performance Data
Record # 86913
Typical performance - not guaranteed values

Winding: 05WGX508-R003	**Type:** 0520M	**Enclosure:** TEBC

Nameplate Data				**460 V, 60 Hz: High Voltage Connection**	
Rated Output (HP)			1	**Full Load Torque**	2.98 LB-FT
Volts			230/460	**Start Configuration**	direct on line
Full Load Amps			3.26/1.63	**Breakdown Torque**	13.9 LB-FT
R.P.M.			1760	**Pull-up Torque**	8 LB-FT
Hz	60	**Phase**	3	**Locked-rotor Torque**	9.18 LB-FT
NEMA Design Code	B	**KVA Code**	N	**Starting Current**	14.4 A
Service Factor (S.F.)			1	**No-load Current**	1.11 A
NEMA Nom. Eff.	85.5	**Power Factor**	67	**Line-line Res. @ 25ºC**	16.7 Ω
Rating - Duty			40C AMB-CONT	**Temp. Rise @ Rated Load**	24°C
				Locked-rotor Power Factor	61.9
				Rotor inertia	0.144 lb-ft²

Load Characteristics 460 V, 60 Hz, 1 HP

% of Rated Load	**25**	**50**	**75**	**100**	**125**	**150**
Power Factor	29	46	59	68	75	79
Efficiency	71.3	81.3	84.7	85.6	85.4	84.7
Speed	1791	1784	1777	1769	1760	1751
Line amperes	1.14	1.25	1.41	1.61	1.84	2.11

ABB Motors and Mechanical Inc.

WINDING # 05WGX508

1 HP 3 PH 60 HZ 1760 RPM 460 V 0520M

Typical performance - not guaranteed values.

TORQUES(LB-FT): PO=13.9 PU=8 LR=9.18 LRA=14.4

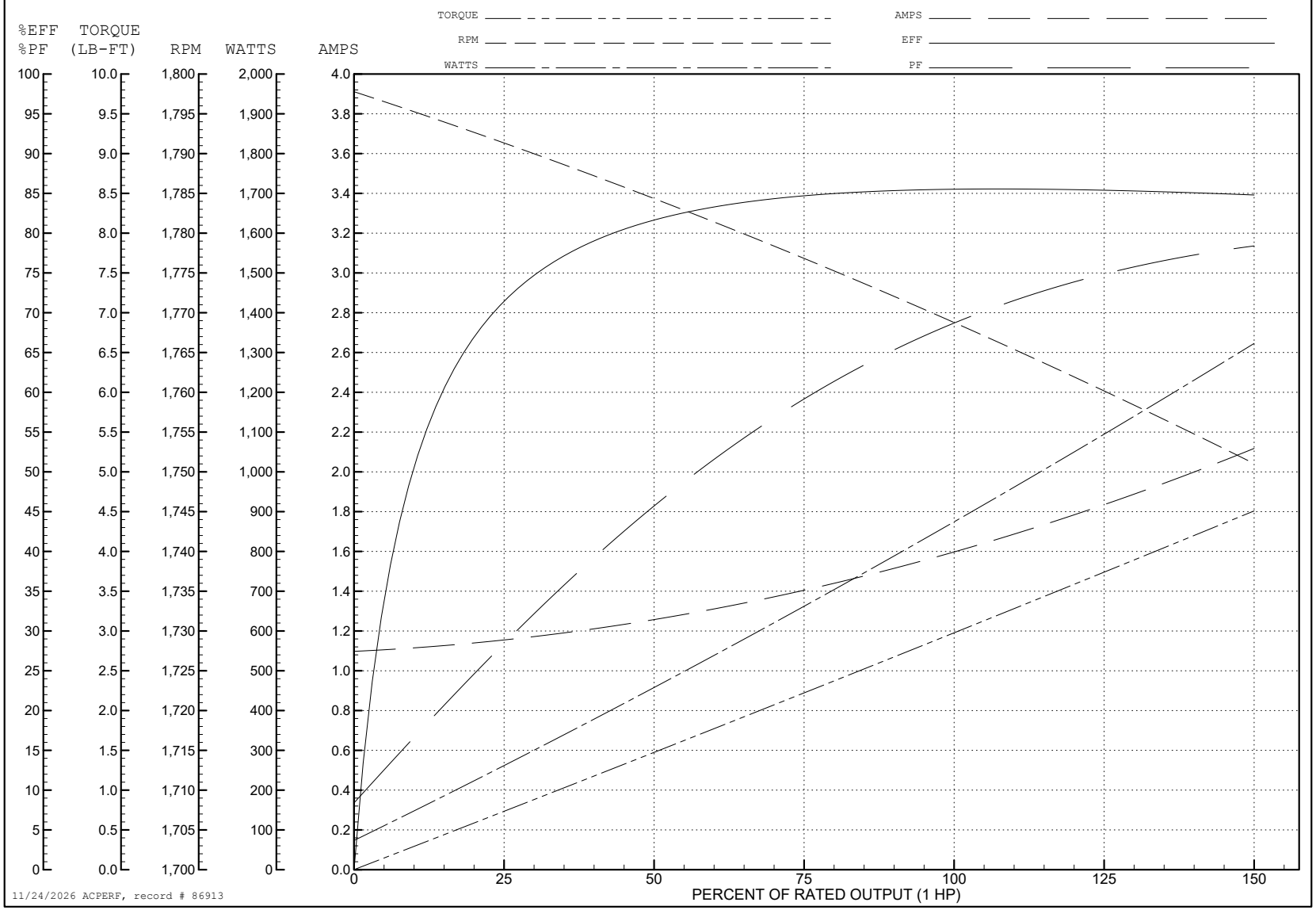

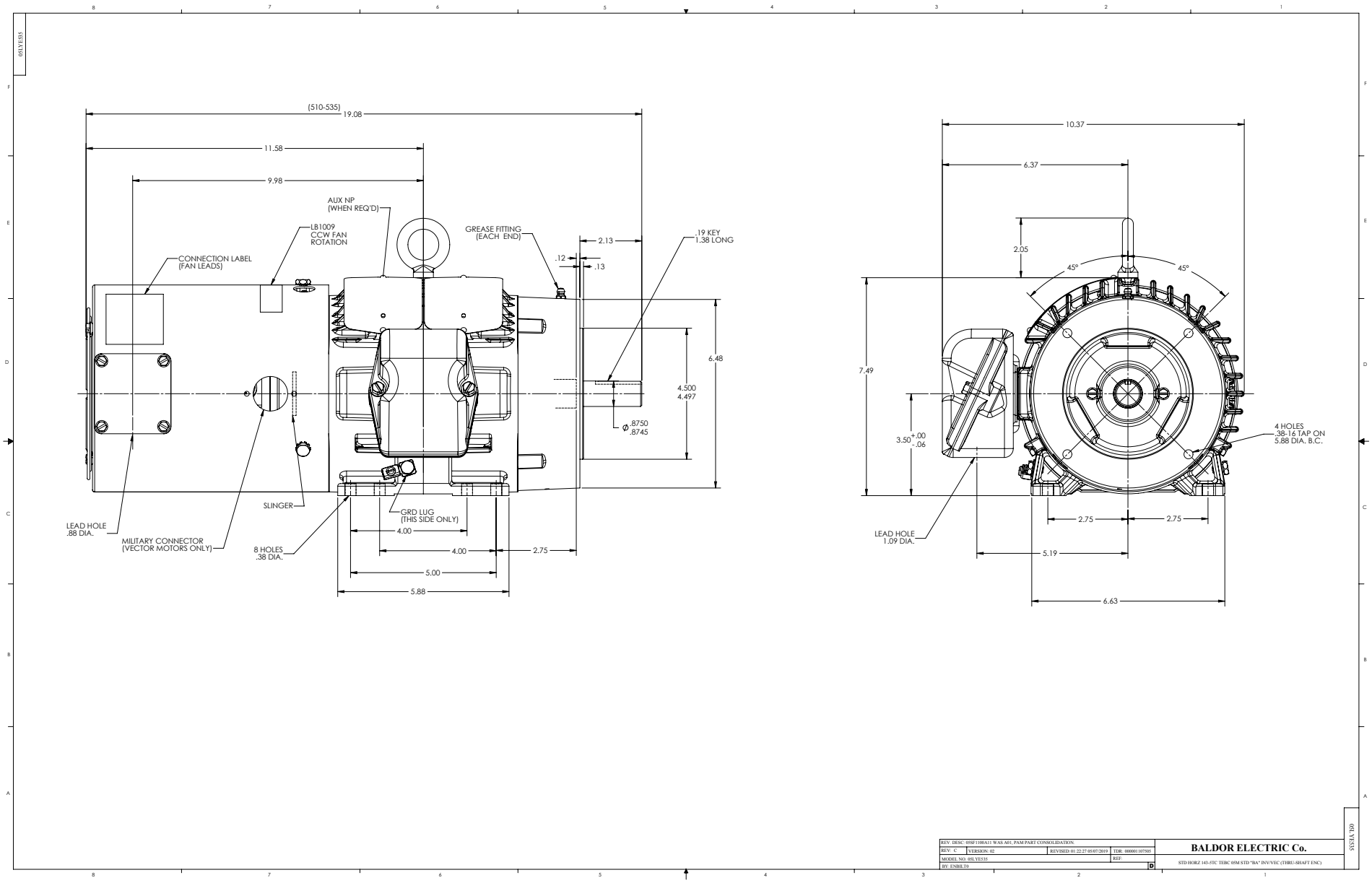
(510-535)
19.08
11.58
9.98
AUX NP
(WHEN REQ'D)
LB1009
CCW FAN
ROTATION
CONNECTION LABEL
(FAN LEADS)
GREASE FITTING
(EACH END)
2.13
.12
.13
.19 KEY
1.38 LONG
6.48
4.500
4.497
Ø .8750
.8745
SLINGER
GRD LUG
(THIS SIDE ONLY)
LEAD HOLE
.88 DIA.
MILITARY CONNECTOR
(VECTOR MOTORS ONLY)
8 HOLES
.38 DIA.
4.00
4.00
2.75
5.00
5.88
10.37
6.37
2.05
45°
45°
7.49
3.50 +.00 -.06
4 HOLES
.38-16 TAP ON
5.88 DIA. B.C.
LEAD HOLE
1.09 DIA.
2.75
2.75
5.19
6.63
REV. DESC: 05SF1100A11 WAS A01, PAM PART CONSOLIDATION.
REV: C
VERSION: 02
REVISED: 01.22.27 05/07/2019
TDR: 00000110750S
MODEL NO: 05LYE535
REF:
BY: ENBILT0
D
BALDOR ELECTRIC Co.
STD HORZ 143-5TC TEBC 05M STD "BA" INV/VEC (THRU-SHAFT ENC)
05LYE535

CD0005

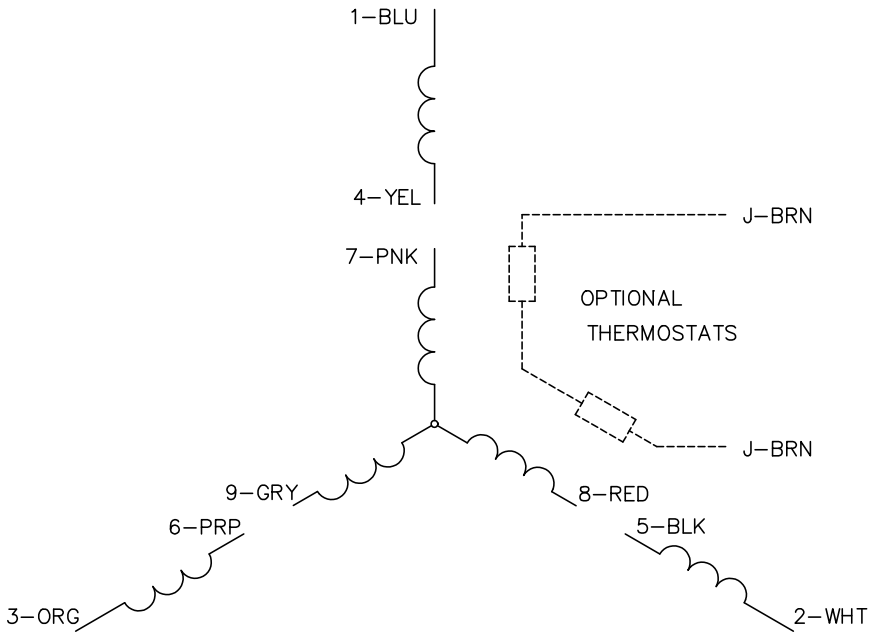

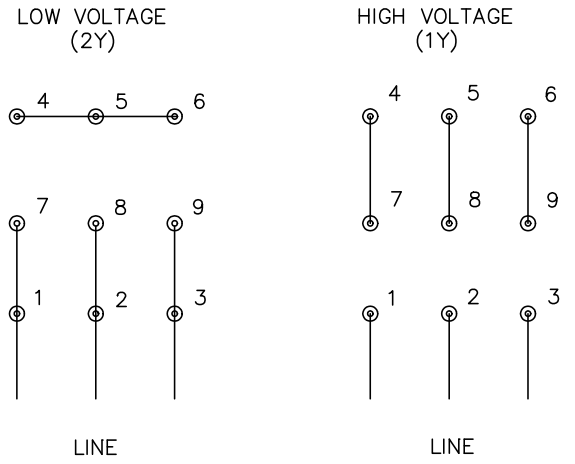

NOTES:

1. INTERCHANGE ANY TWO LINE LEADS TO REVERSE ROTATION.
2. OPTIONAL THERMOSTATS ARE PROVIDED WHEN SPECIFIED.
3. ACTUAL NUMBER OF INTERNAL PARALLEL CIRCUITS MAY BE A MULTIPLE OF THOSE SHOWN ABOVE.
4. LEAD COLORS ARE OPTIONAL. LEADS MUST ALWAYS BE NUMBERED AS SHOWN.

CD0005

REV. DESC: REVISE TO SHOW OPTIONAL COLORS			BALDOR ELECTRIC Co.
REV. LTR: E	BY: JLP	REVISED: 01/19/99 10:15	TDR: 0171435
CD0005		FILE: AAA00005140	MDL: –
		MTL: –	3PH, DV, 9 LEADS