35LYE356

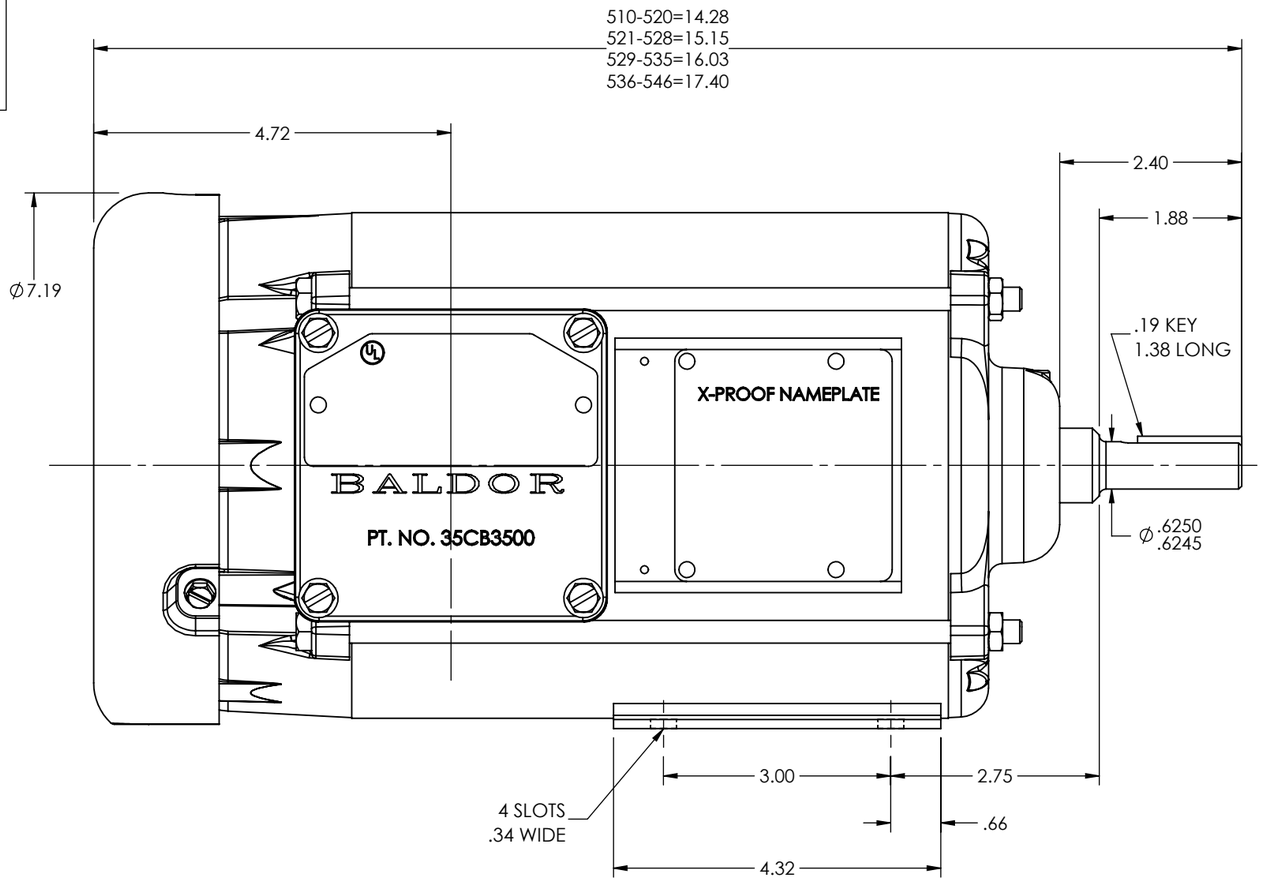

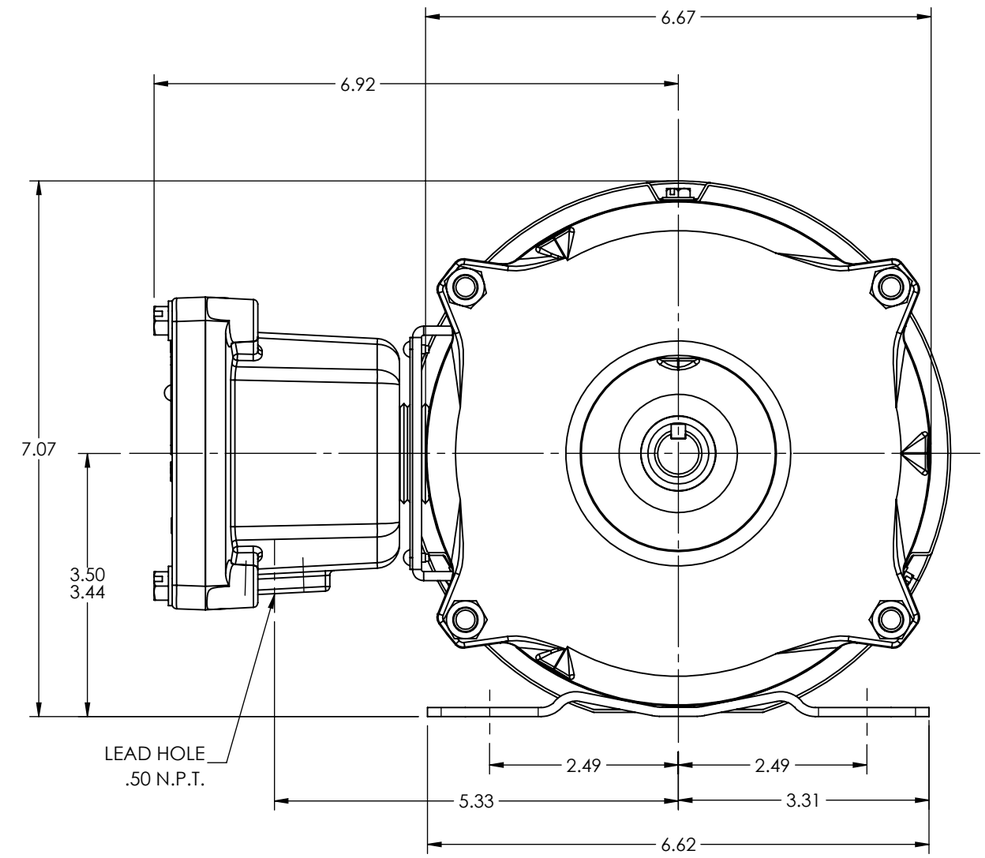

REV. DESC: UPDATE DIMS AND GRAPHICS TO MATCH REV E			
REV: G	VERSION: 02	REVISED: 10:03:15 10/03/2019	TDR: 000001121888
MODEL NO. 35LYE356			REF: -
BY: USBUFRA	Material: -		B

BALDOR - RELIANCE®

STD HORZ NEMA 56 TEFC X35M CL I-GP D-CL II-GP F&G

35LYE356