36LYN003

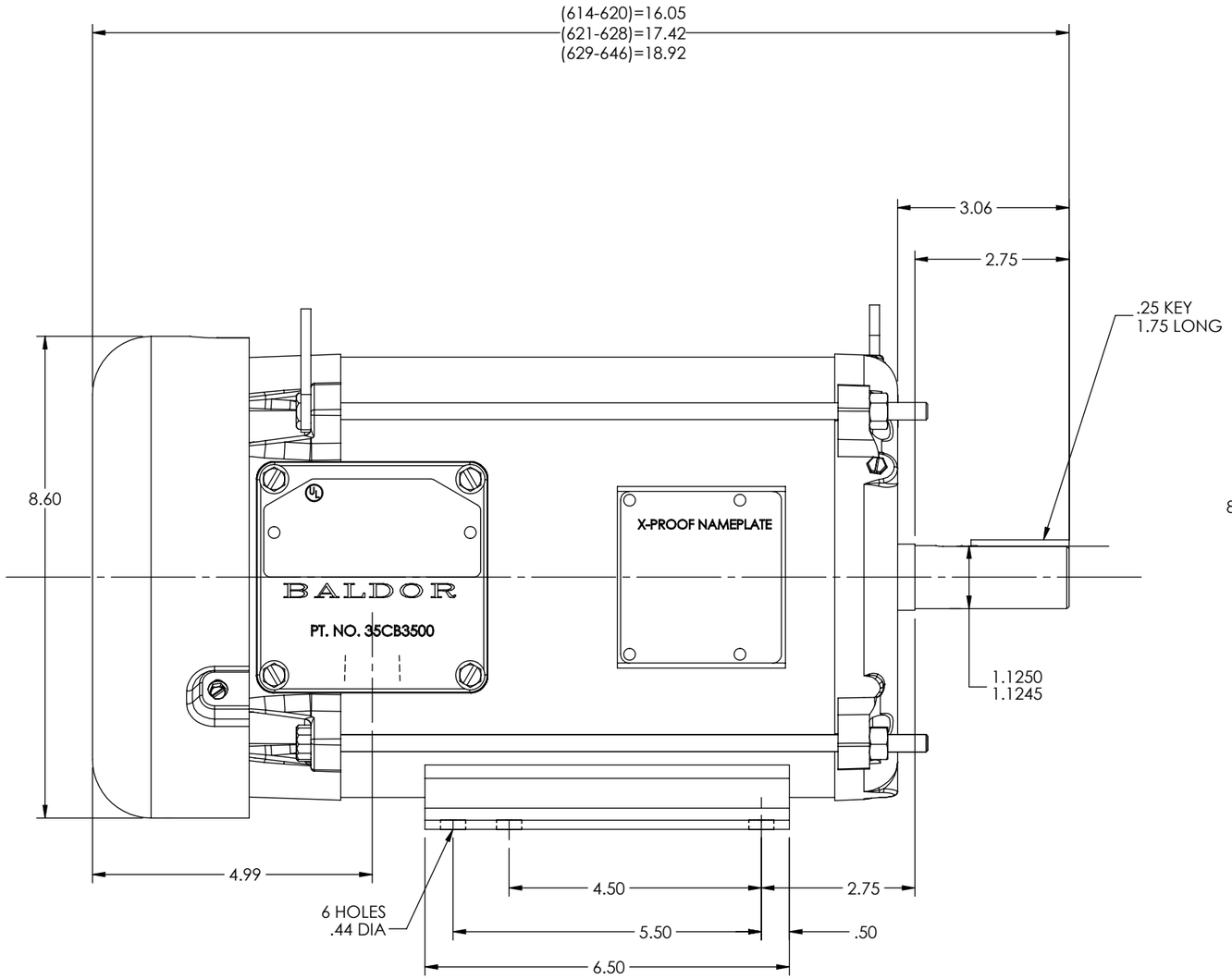

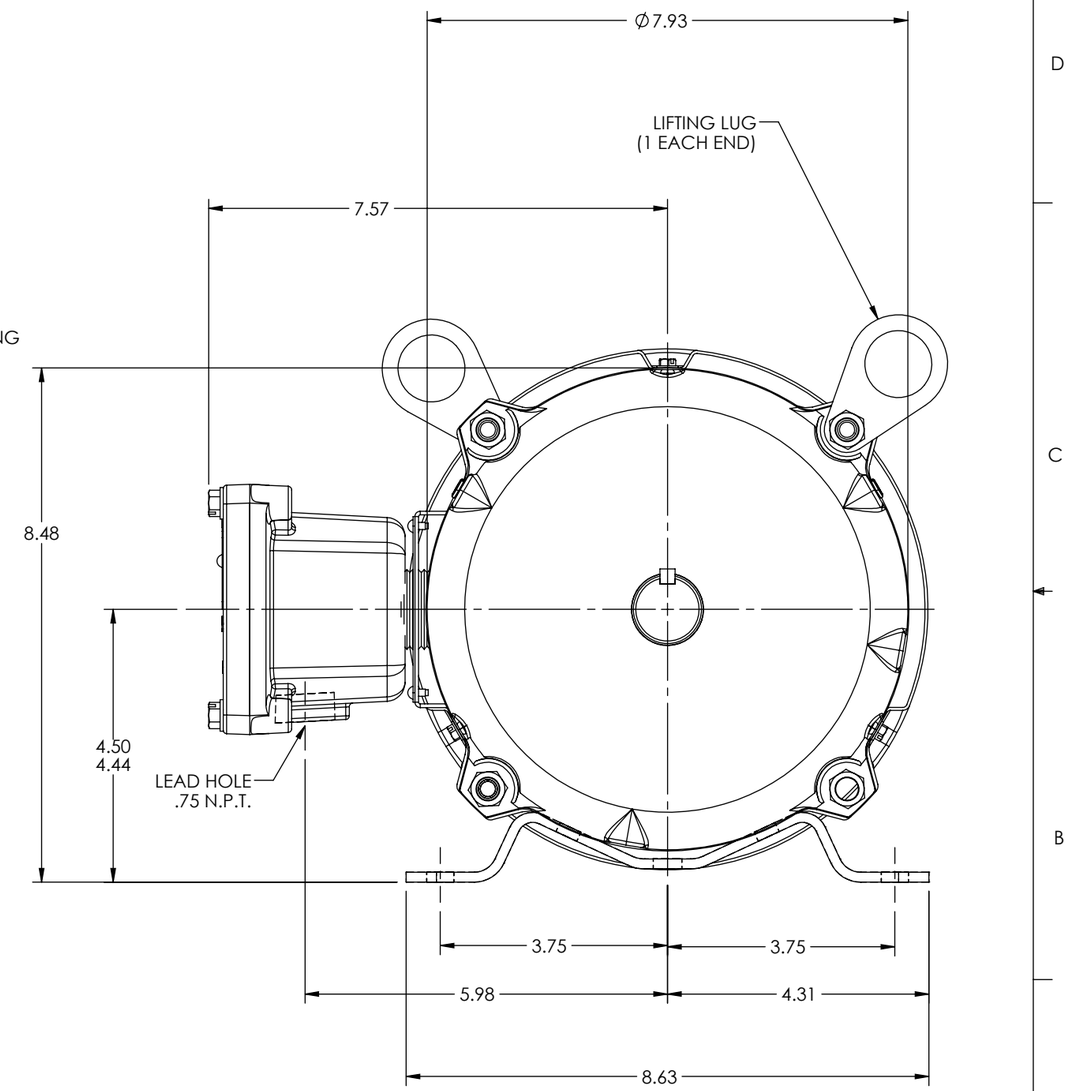

36LYN003

REV. DESC: BAND WAS 36SB7000, NOW 7046, CHANGED FOR INFN/BALA			
REV: F	VERSION: 02	REVISED: 03:47:23 02/21/2023	TDR: 000001204528
MODEL NO. 36LYN003			REF: -
BY: ENBILT0	Material: -		B

BALDOR

HORZ 182-4T XPFC L CL I-GP D, CL II-GP F&G, LIFT LUGS

36LYN003