ABB BALDOR RELIANCE

Customer information packet

VXT3256T-5

25HP, 1180RPM, 3PH, 60HZ, 324TC, 1260M, TEFC, F
Class - CLI GP A,B,C,D
Division - Division II

Copyright © All product information within this document is subject to ABB Motors and Mechanical Inc. copyright © protection, unless otherwise noted.
11/25/2026 5:13:10 PM

Specifications

Enclosure	TEFC
Frame	324TC
Frame Material	Iron
Frequency	60.00 Hz
Haz Area Class and Group	CLI GP A,B,C,D
Haz Area Division	Division II
Motor Letter Type	Three Phase
Output @ Frequency	25.000 HP @ 60 HZ
Phase	3
Synchronous Speed @ Frequency	1200 RPM @ 60 HZ
Voltage @ Frequency	575.0 V @ 60 HZ
Agency Approvals	UR
	NEMA_PREMIUM
	NEMA PREMIUM
	CSA EEV
	CCSA US
Ambient Temperature	40 °C
Auxiliary Box	NO AUXILLARY BOX
Auxiliary Box Lead Termination	None
Base Indicator	No Mounting
Bearing Grease Type	Polyrex EM (-20F +300F)
Blower	None
Constant Torque Speed Range	3
Current @ Voltage	25.700 A @ 575.0 V
Design Code	A
Drip Cover	No Drip Cover
Duty Rating	CONT
Efficiency @ 100% Load	93.0 %
Electrically Isolated Bearing	Not Electrically Isolated
Feedback Device	NO FEEDBACK
Haz Area Temp Code	T3
Heater Indicator	No Heater

Part Detail

Revision	B
Type	AC
Mech. spec.	
Base	
Status	PRD/A
Elec. spec.	12WGY448
Layout	12LY-000-020
Eff. date	11-27-2024
CD Diagram	CD0006
Poles	06
Leads	3#8
Proprietary	False
Created date	06-07-2021

High Voltage Full Load Amps	25.7 a
Insulation Class	F
Inverter Code	Inverter Duty
IP Rating	NONE
KVA Code	H
Lifting Lugs	Standard Lifting Lugs
Locked Bearing Indicator	Locked Bearing
Motor Lead Termination	Flying Leads
Motor Standards	NEMA
Motor Type	1260M
Mounting Arrangement	F1
Number of Poles	6
Overall Length	30.28 IN
Power Factor	79
Product Family	General Purpose
Pulley Face Code	Standard
Rodent Screen	None
Service Factor	1.15
Shaft Diameter	2.125 IN
Shaft Ground Indicator	No Shaft Grounding
Shaft Rotation	Reversible
Speed	1180 rpm
Speed Code	Single Speed
Starting Method	Direct on line
Thermal Device - Bearing	None
Thermal Device - Winding	None
Vibration Sensor Indicator	No Vibration Sensor
Winding Thermal 1	None
Winding Thermal 2	None

Nameplate

NP4224L										
CAT.NO.	VXT3256T-5					**I.P.**	54			
SPEC.	12-0000-2203					**ENCL**	TEFC			
FRAME	324TC	**H.P.**	25			**T. CODE**	T3			
VOLTS	575		**P.F.**	79						
F.L. AMPS	25.7			**RATING**	40C AMB-CONT					
R.P.M.	1180									
HZ.	60	**PH.**	3	**CLASS**	F					
SER.F.	1.15	**DES.**	A	**SL HZ**	1					
NEMA NOM. EFF.	93		**WK2**	11.5						
DE	6312	**ODE**	6311							
MAG. CUR.	11.4									
INV TYPE	PWM	**CHP**	60	**TO**	90	**INV TEMP CODE**	T3			
CT	3	**TO**	60	**VT**	3	**TO**	60			
CC	010A	**SN**								

AC Induction Motor Performance Data
Record # 47256
Typical performance - not guaranteed values

Winding: 12WGY448-R002	**Type:** 1260M	**Enclosure:** TEFC

Nameplate Data				**575 V, 60 Hz: Single Voltage Motor**	
Rated Output (HP)			25	**Full Load Torque**	111 LB-FT
Volts			575	**Start Configuration**	direct on line
Full Load Amps			25.7	**Breakdown Torque**	314 LB-FT
R.P.M.			1180	**Pull-up Torque**	119 LB-FT
Hz	60	**Phase**	3	**Locked-rotor Torque**	174 LB-FT
NEMA Design Code	A	**KVA Code**	H	**Starting Current**	162 A
Service Factor (S.F.)			1.15	**No-load Current**	11.3 A
NEMA Nom. Eff.	93	**Power Factor**	79	**Line-line Res. @ 25ºC**	0.43 Ω
Rating - Duty			40C AMB-CONT	**Temp. Rise @ Rated Load**	46°C
S.F. Amps				**Temp. Rise @ S.F. Load**	56°C
				Rotor inertia	11.5 LB-FT2

Load Characteristics 575 V, 60 Hz, 25 HP

% of Rated Load	**25**	**50**	**75**	**100**	**125**	**150**	**S.F.**
Power Factor	42	64	74	79	81	81	80
Efficiency	87.2	91.9	92.9	93	92.5	91.2	92.6
Speed	1196	1192	1188	1184	1180	1173	1182
Line amperes	12.8	16	20.5	25.7	31.4	39.3	29.1

ABB Motors and Mechanical Inc.

WINDING # 12WGY448

25 HP 3 PH 60 HZ 1180 RPM 575 V 1260M

Typical performance - not guaranteed values.

TORQUES(LB-FT): PO=314 PU=119 LR=174 LRA=162

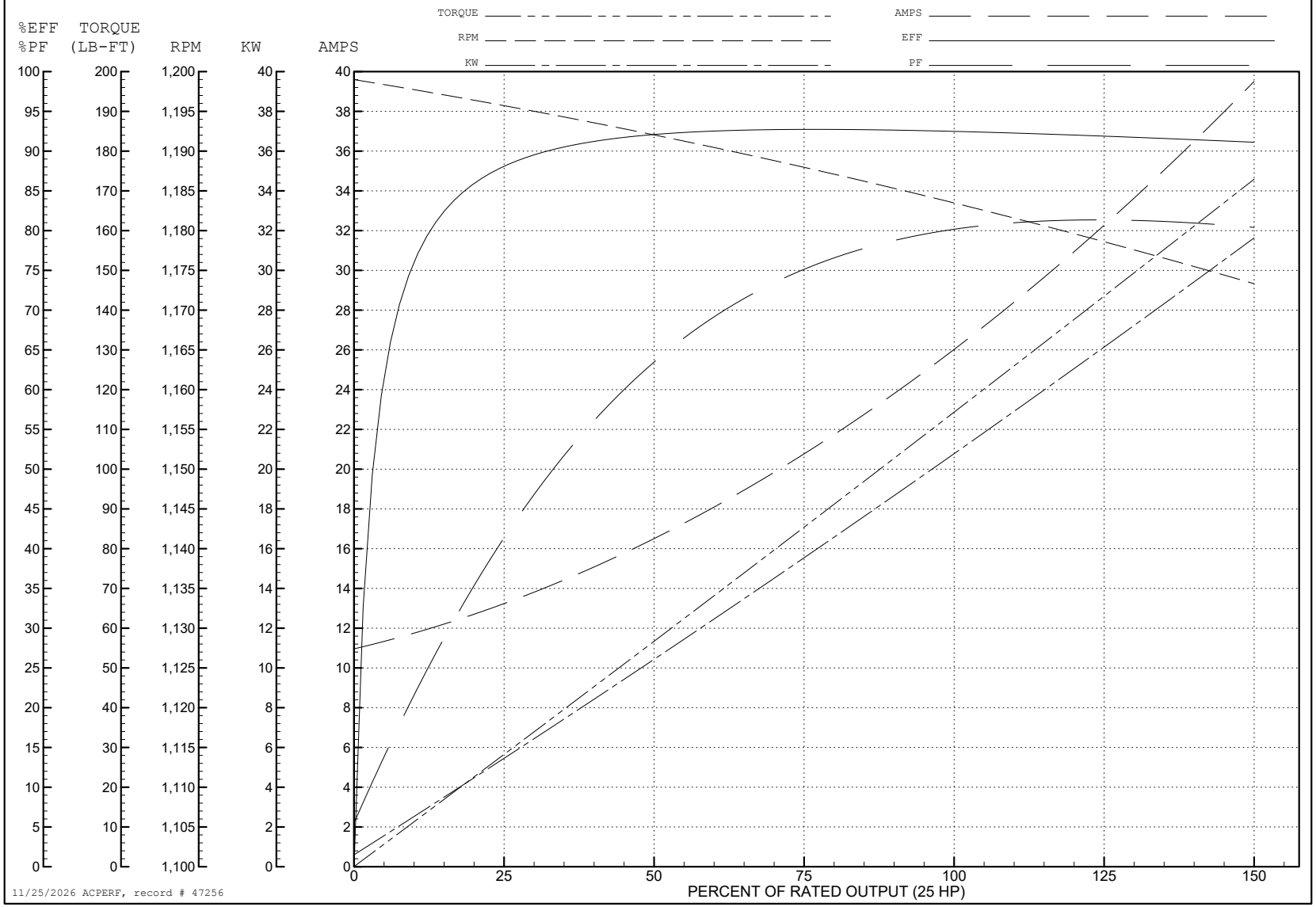

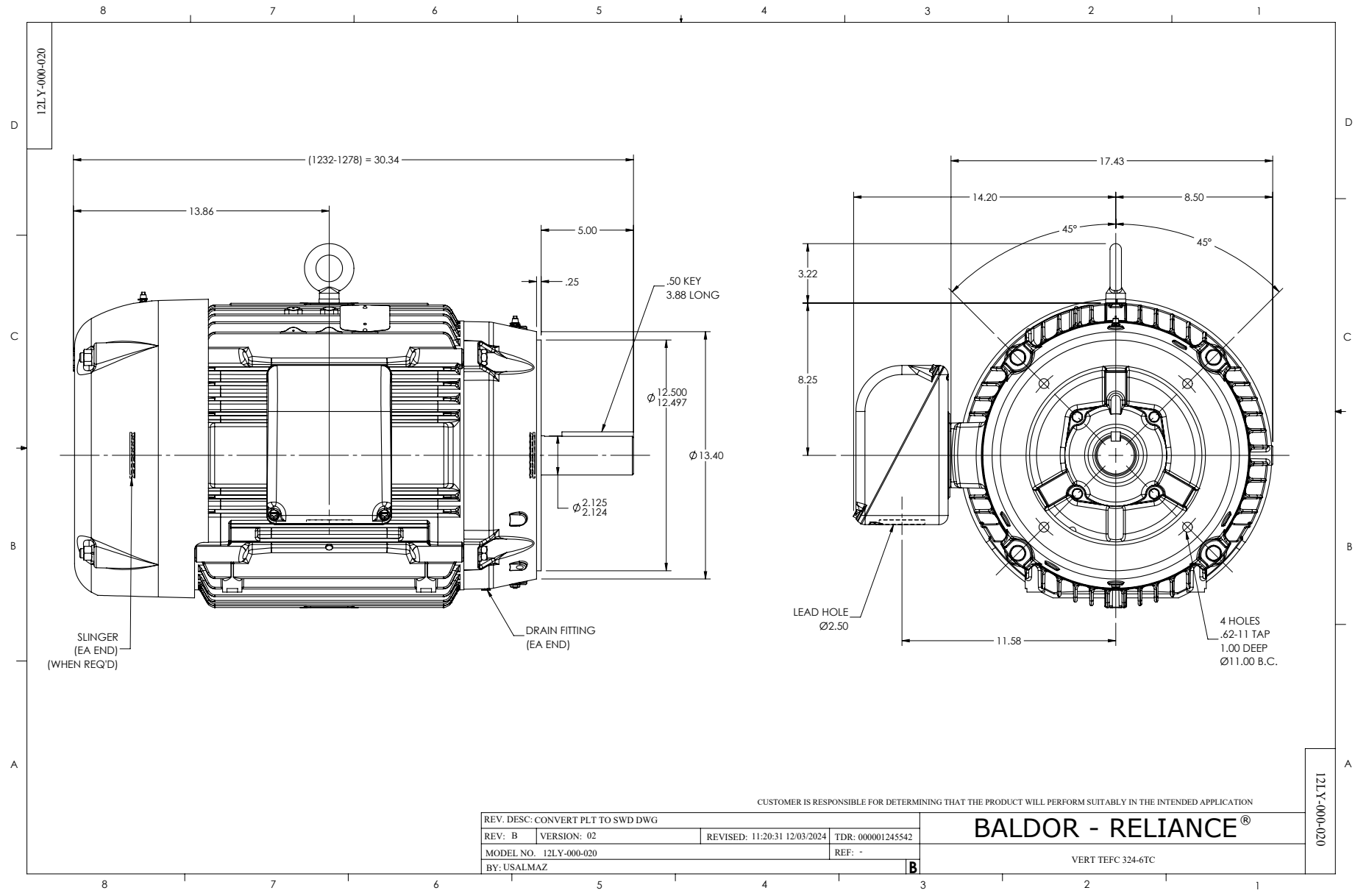
12LY-000-020
(1232-1278) = 30.34
13.86
5.00
.25
.50 KEY
3.88 LONG
Ø 12.500
12.497
Ø13.40
Ø 2.125
2.124
SLINGER
(EA END)
(WHEN REQ'D)
DRAIN FITTING
(EA END)
17.43
14.20
8.50
45°
45°
3.22
8.25
LEAD HOLE
Ø2.50
11.58
4 HOLES
.62-11 TAP
1.00 DEEP
Ø11.00 B.C.
CUSTOMER IS RESPONSIBLE FOR DETERMINING THAT THE PRODUCT WILL PERFORM SUITABLY IN THE INTENDED APPLICATION
REV. DESC: CONVERT PLT TO SWD DWG
REV: B
VERSION: 02
REVISED: 11:20:31 12/03/2024
TDR: 000001245542
MODEL NO. 12LY-000-020
REF: -
BY: USALMAZ
B
BALDOR - RELIANCE®
VERT TEFC 324-6TC
12LY-000-020

CD0006

TYPICAL WYE–CONNECTED MOTOR

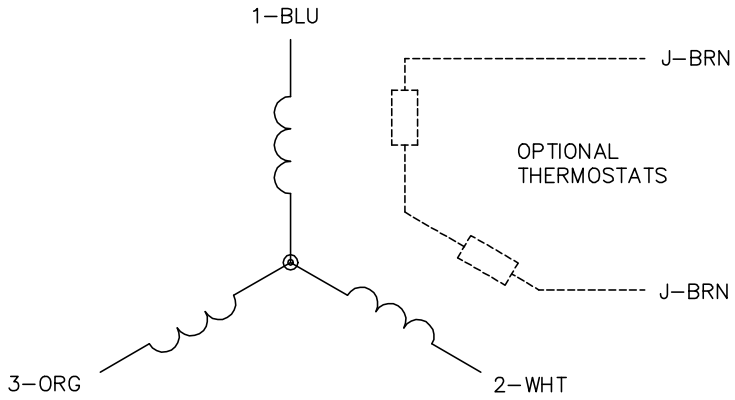

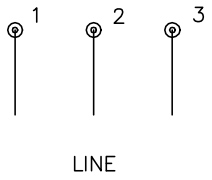

TYPICAL DELTA–CONNECTED MOTOR

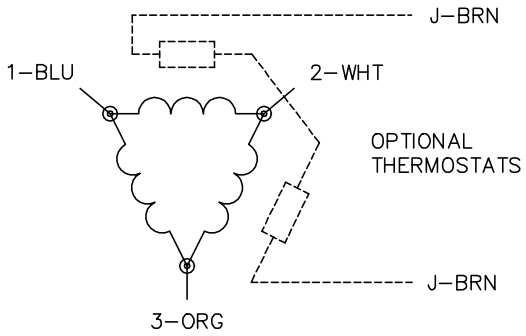

NOTES:

1. THREE LEAD MOTOR MAY BE EITHER WYE CONNECTED OR DELTA CONNECTED.
2. INTERCHANGE ANY TWO LINE LEADS TO REVERSE ROTATION.
3. OPTIONAL THERMOSTATS ARE PROVIDED WHEN SPECIFIED.
4. ACTUAL NUMBER OF INTERNAL PARALLEL CIRCUITS MAY VARY.
5. LEAD COLORS ARE OPTIONAL. LEADS MUST BE NUMBERED AS SHOWN.

CD0006

REV. DESC: ADD CLASS CONN00000007			BALDOR - RELIANCE®
REV. LTR: E	VERSION: 01	TDR: 000001099922	
FILE: \AAA\00005\141	REVISED: 10:24:49 02/19/2019	BY: ENBRIR0	3PH, SV, 3 LEADS, WYE OR DELTA CONNECTED
MTL: –			SH 1 of 1