09LY-001-011

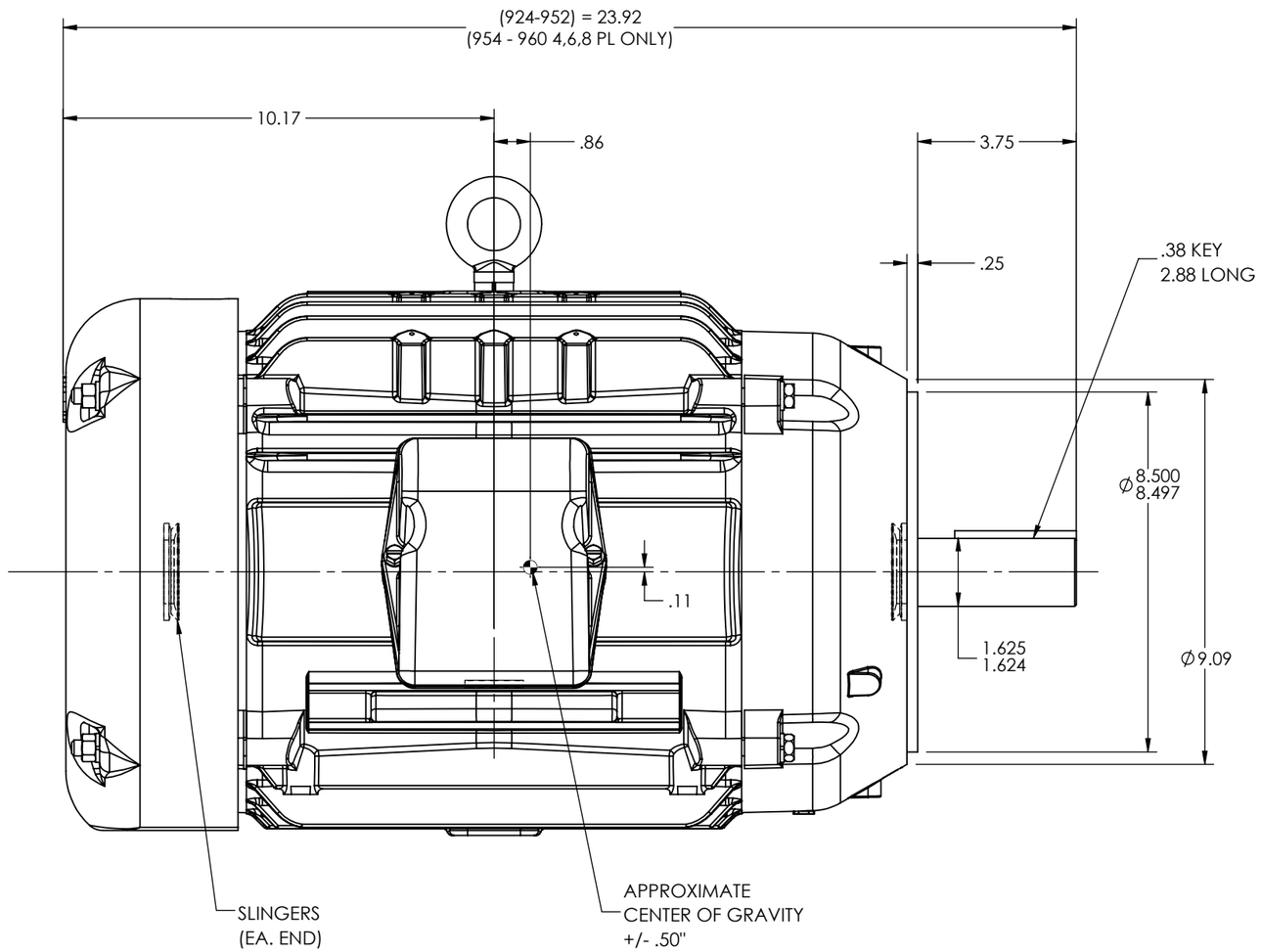

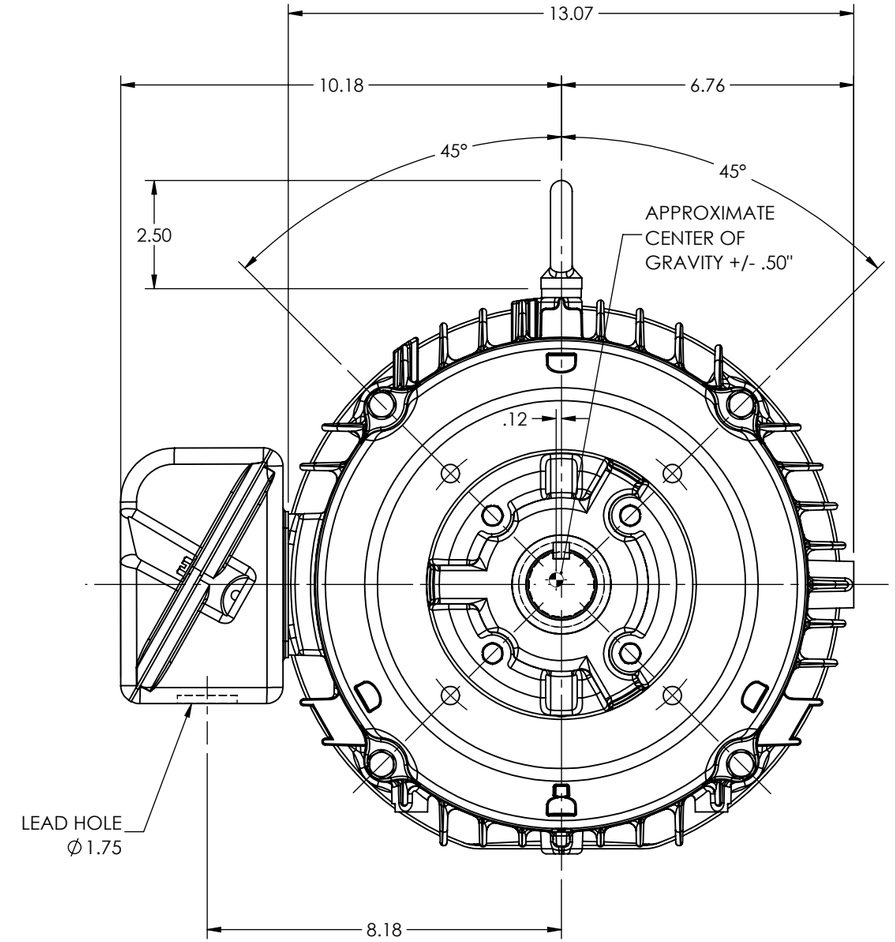

CUSTOMER IS RESPONSIBLE FOR DETERMINING THAT THE PRODUCT WILL PERFORM SUITABLY IN THE INTENDED APPLICATION

REV. DESC: CORRECT A DIMENSION OF OAL			
REV: D	VERSION: 04	REVISED: 08:17:37 08/21/2023	TDR: 000001214442
MODEL NO. 09LY-001-011			REF: -
BY: USALMAZ			B

BALDOR - RELIANCE®

VERT TEFC 254-6TC W/SLD BRGS

09LY-001-011