Customer information packet

VXT3156T-5

15HP, 1175RPM, 3PH, 60HZ, 284TC, 1046M, TEFC, F
Class - CLI GP A,B,C,D
Division - Division II

Copyright © All product information within this document is subject to ABB Motors and Mechanical Inc. copyright © protection, unless otherwise noted.
10/18/2026 11:35:18 PM

Specifications

Enclosure	TEFC
Frame	284TC
Frame Material	Iron
Frequency	60.00 Hz
Haz Area Class and Group	CLI GP A,B,C,D
Haz Area Division	Division II
Motor Letter Type	Three Phase
Output @ Frequency	15.000 HP @ 60 HZ
Phase	3
Synchronous Speed @ Frequency	1200 RPM @ 60 HZ
Voltage @ Frequency	575.0 V @ 60 HZ
Agency Approvals	UR
	NEMA_PREMIUM
	NEMA PREMIUM
	CSA EEV
	CCSA US
Ambient Temperature	40 °C
Auxiliary Box	NO AUXILLARY BOX
Auxiliary Box Lead Termination	None
Base Indicator	No Mounting
Bearing Grease Type	Polyrex EM (-20F +300F)
Blower	None
Constant Torque Speed Range	3
Current @ Voltage	16.000 A @ 575.0 V
Design Code	A
Drip Cover	No Drip Cover
Duty Rating	CONT
Efficiency @ 100% Load	91.7 %
Electrically Isolated Bearing	Not Electrically Isolated
Feedback Device	NO FEEDBACK
Haz Area Temp Code	T3C
Heater Indicator	No Heater

Part Detail

Revision	B
Type	AC
Mech. spec.	
Base	
Status	PRD/A
Elec. spec.	10WGY949
Layout	10LYC153
Eff. date	11-27-2024
CD Diagram	CD0006
Poles	06
Leads	3#12
Proprietary	False
Created date	06-09-2021

High Voltage Full Load Amps	16.0 a
Insulation Class	F
Inverter Code	Inverter Duty
IP Rating	NONE
KVA Code	H
Lifting Lugs	Standard Lifting Lugs
Locked Bearing Indicator	Locked Bearing
Motor Lead Termination	Flying Leads
Motor Standards	NEMA
Motor Type	1046M
Mounting Arrangement	F1
Number of Poles	6
Overall Length	27.76 IN
Power Factor	76
Product Family	General Purpose
Pulley Face Code	C-Face
Rodent Screen	None
Service Factor	1.15
Shaft Diameter	1.875 IN
Shaft Ground Indicator	No Shaft Grounding
Shaft Rotation	Reversible
Speed	1175 rpm
Speed Code	Single Speed
Starting Method	Direct on line
Thermal Device - Bearing	None
Thermal Device - Winding	None
Vibration Sensor Indicator	No Vibration Sensor
Winding Thermal 1	None
Winding Thermal 2	None

Nameplate

NP4224L							
CAT.NO.	VXT3156T-5				**I.P.**	54	
SPEC.	10-0000-2174				**ENCL**	TEFC	
FRAME	284TC	**H.P.**	15		**T. CODE**	T3C	
VOLTS	575	**P.F.**	76				
F.L. AMPS	16	**RATING**	40C AMB-CONT				
R.P.M.	1175						
HZ.	60	**PH.**	3	**CLASS**	F		
SER.F.	1.15	**DES.**	A	**SL HZ**	1.3		
NEMA NOM. EFF.	91.7	**WK2**	4.9				
DE	6311	**ODE**	6309				
MAG. CUR.	8.2						
INV TYPE	PWM	**CHP**	60	**TO**	90	**INV TEMP CODE**	T3C
CT	3	**TO**	60	**VT**	3	**TO**	60
CC	010A	**SN**					

AC Induction Motor Performance Data
Record # 88739
Typical performance - not guaranteed values

Winding: 10WGY949-R001	**Type:** 1046M	**Enclosure:** TEFC

Nameplate Data				**575 V, 60 Hz: Single Voltage Motor**	
Rated Output (HP)			15	**Full Load Torque**	66.7 LB-FT
Volts			575	**Start Configuration**	direct on line
Full Load Amps			16	**Breakdown Torque**	201 LB-FT
R.P.M.			1175	**Pull-up Torque**	87.8 LB-FT
Hz	60	**Phase**	3	**Locked-rotor Torque**	107 LB-FT
NEMA Design Code	A	**KVA Code**	H	**Starting Current**	109 A
Service Factor (S.F.)			1.15	**No-load Current**	8.97 A
NEMA Nom. Eff.	91.7	**Power Factor**	76	**Line-line Res. @ 25ºC**	0.868 Ω
Rating - Duty			40C AMB-CONT	**Temp. Rise @ Rated Load**	43°C
S.F. Amps				**Temp. Rise @ S.F. Load**	52°C
				Locked-rotor Power Factor	33.5
				Rotor inertia	5.63 LB-FT2

Load Characteristics 575 V, 60 Hz, 15 HP

% of Rated Load	**25**	**50**	**75**	**100**	**125**	**150**	**S.F.**
Power Factor	35	55	68	75	78	80	76
Efficiency	83.5	89.7	91.3	91.6	91.3	90.6	91.7
Speed	1196	1192	1189	1185	1180	1176	1184
Line amperes	9.64	11.25	13.58	16.41	19.7	23.25	17.5

ABB Motors and Mechanical Inc.

WINDING # 10WGY949

15 HP 3 PH 60 HZ 1175 RPM 575 V 1046M

Typical performance - not guaranteed values.

TORQUES(LB-FT): PO=201 PU=87.8 LR=107 LRA=109

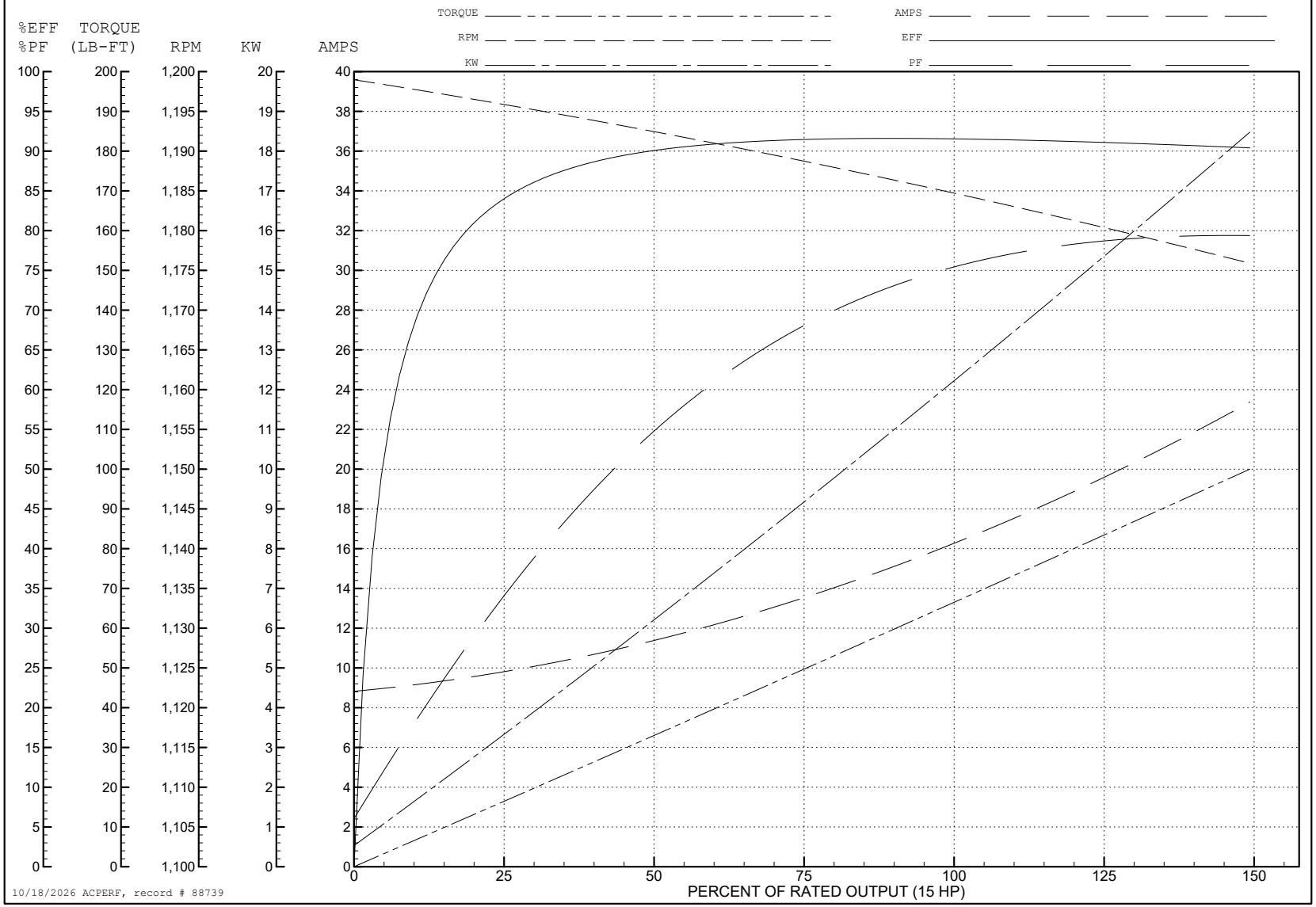

10/18/2026 ACPERF, record # 88739

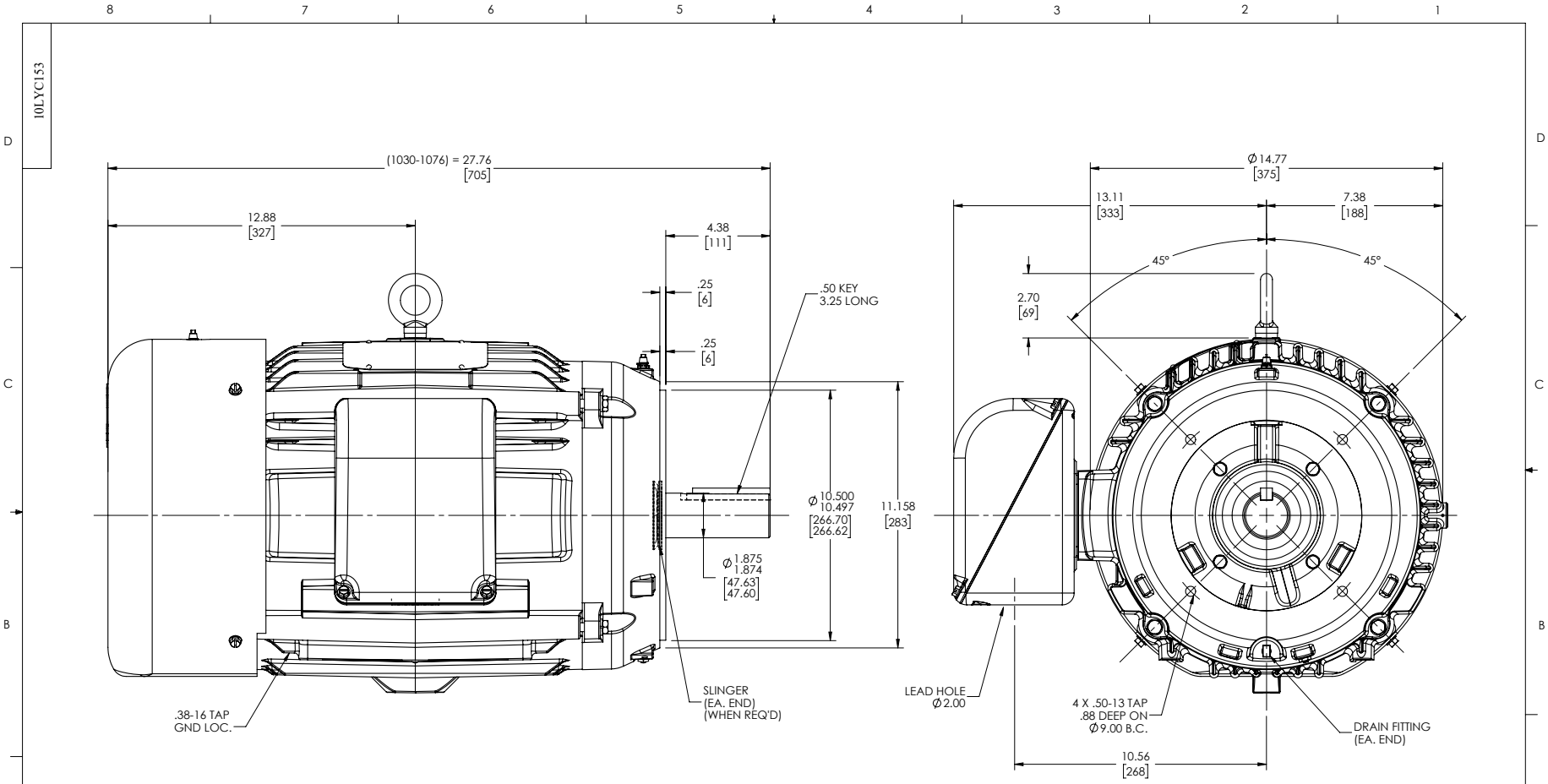

CUSTOMER IS RESPONSIBLE FOR DETERMINING THAT BALDOR'S PRODUCT WILL PERFORM SUITABLY IN THE INTENDED APPLICATION

REV. DESC: ADD LEADER FOR GND			
REV: N	VERSION: 13	REVISED: 06:27:03 01/03/2024	TDR: 000001222843
MODEL NO. 10LYC153			REF: -
BY: ENSHAB0			B

BALDOR

VERT TEFC 284-6TC W/STL FAN COVER

10LYC153

CD0006

TYPICAL WYE–CONNECTED MOTOR

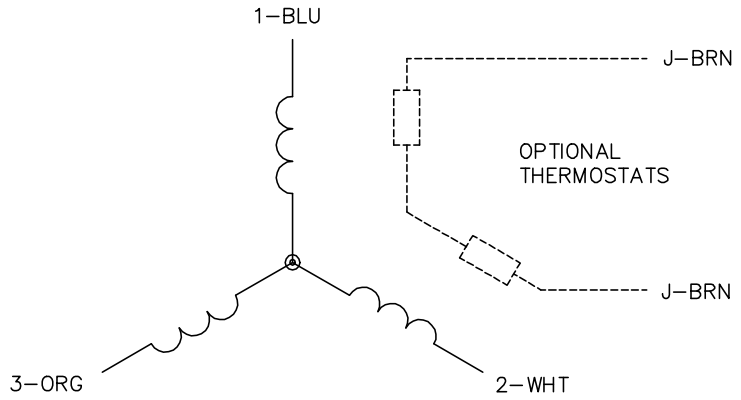

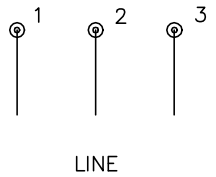

TYPICAL DELTA–CONNECTED MOTOR

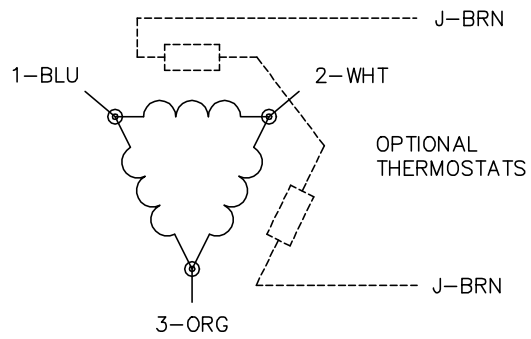

NOTES:

1. THREE LEAD MOTOR MAY BE EITHER WYE CONNECTED OR DELTA CONNECTED.
2. INTERCHANGE ANY TWO LINE LEADS TO REVERSE ROTATION.
3. OPTIONAL THERMOSTATS ARE PROVIDED WHEN SPECIFIED.
4. ACTUAL NUMBER OF INTERNAL PARALLEL CIRCUITS MAY VARY.
5. LEAD COLORS ARE OPTIONAL. LEADS MUST BE NUMBERED AS SHOWN.

CD0006

REV. DESC: ADD CLASS CONN00000007			BALDOR - RELIANCE®
REV. LTR: E	VERSION: 01	TDR: 000001099922	
FILE: \AAA\00005\141	REVISED: 10:24:49 02/19/2019	BY: ENBRIR0	3PH, SV, 3 LEADS, WYE OR DELTA CONNECTED
MTL: –			SH 1 of 1