ABB BALDOR RELIANCE

Customer information packet

VXT30154T-5

1.5HP, 1768RPM, 3PH, 60HZ, 145TC, 0522M, TEFC
Class - CLI GP A,B,C,D
Division - Division II

Copyright © All product information within this document is subject to ABB Motors and Mechanical Inc. copyright © protection, unless otherwise noted.
11/24/2026 10:12:31 AM

Specifications

Enclosure	TEFC
Frame	145TC
Frame Material	Iron
Frequency	60.00 Hz
Haz Area Class and Group	CLI GP A,B,C,D
Haz Area Division	Division II
Motor Letter Type	Three Phase
Output @ Frequency	1.500 HP @ 60 HZ
Phase	3
Synchronous Speed @ Frequency	1800 RPM @ 60 HZ
Voltage @ Frequency	575.0 V @ 60 HZ
Agency Approvals	CCSA US
	CSA EEV
	NEMA PREMIUM
	NEMA_PREMIUM
	UR
Ambient Temperature	40 °C
Auxiliary Box	NO AUXILLARY BOX
Auxiliary Box Lead Termination	None
Base Indicator	No Mounting
Bearing Grease Type	Polyrex EM (-20F +300F)
Blower	None
Constant Torque Speed Range	3
Current @ Voltage	1.710 A @ 575.0 V
Design Code	B
Drip Cover	No Drip Cover
Duty Rating	CONT
Efficiency @ 100% Load	86.5 %
Electrically Isolated Bearing	Not Electrically Isolated
Feedback Device	NO FEEDBACK
Front Shaft Indicator	None
Haz Area Temp Code	T4

Part Detail

Revision	A
Type	AC
Mech. spec.	05E6082
Base	
Status	PRD/A
Elec. spec.	05WGX559
Layout	05LYE6082
Eff. date	11-27-2024
CD Diagram	CD0006
Poles	04
Leads	3#18
Proprietary	False
Created date	12-20-2023

Heater Indicator	No Heater
High Voltage Full Load Amps	1.7 a
Insulation Class	F
Inverter Code	Inverter Duty
KVA Code	L
Lifting Lugs	No Lifting Lugs
Locked Bearing Indicator	Locked Bearing
Motor Lead Quantity/Wire Size	3 @ 18 AWG
Motor Lead Termination	Flying Leads
Motor Standards	NEMA
Motor Type	0522M
Mounting Arrangement	F1
Number of Poles	4
Overall Length	12.54 IN
Power Factor	76
Product Family	General Purpose
Pulley End Bearing Type	Sealed Bearing
Pulley Face Code	C-Face
Pulley Shaft Indicator	Standard
Rodent Screen	None
Service Factor	1.15
Shaft Diameter	0.875 IN
Shaft Ground Indicator	No Shaft Grounding
Shaft Rotation	Reversible
Shaft Slinger Indicator	No Slinger
Speed	1768 rpm
Speed Code	Single Speed
Starting Method	Direct on line
Thermal Device - Bearing	None
Thermal Device - Winding	None
Vibration Sensor Indicator	No Vibration Sensor
Winding Thermal 1	None
Winding Thermal 2	None

Nameplate

NP4224L									
CAT.NO.	VXT30154T-5					**I.P.**	54		
SPEC.	05E6082X559G1					**ENCL**	TEFC		
FRAME	145TC	**H.P.**	1.5			**T. CODE**	T4		
VOLTS	575			**P.F.**	76				
F.L. AMPS	1.71			**RATING**	40C AMB-CONT				
R.P.M.	1768								
HZ.	60	**PH.**	3	**CLASS**	F				
SER.F.	1.15	**DES.**	B	**SL HZ**	1.07				
NEMA NOM. EFF.	86.5	**WK2**	0.159						
DE	6205	**ODE**	6203						
MAG. CUR.	1.05								
INV TYPE	PWM	**CHP**	60	**TO**	90	**INV TEMP CODE**	T4		
CT	3	**TO**	60	**VT**	3	**TO**	60		
CC	010A	**SN**							
	1.15 SF ON SINE WAVE								

AC Induction Motor Performance Data
Record # 99855
Typical performance - not guaranteed values

Winding: 05WGX559-R006	**Type:** 0522M	**Enclosure:** TEFC

Nameplate Data				**575 V, 60 Hz: Single Voltage Motor**	
Rated Output (HP)			1.5	**Full Load Torque**	4.46 LB-FT
Volts			575	**Start Configuration**	direct on line
Full Load Amps			1.71	**Breakdown Torque**	16.7 LB-FT
R.P.M.			1768	**Pull-up Torque**	9.8 LB-FT
Hz	60	**Phase**	3	**Locked-rotor Torque**	11.4 LB-FT
NEMA Design Code	B	**KVA Code**	L	**Starting Current**	14.2 A
Service Factor (S.F.)			1.15	**No-load Current**	1.05 A
NEMA Nom. Eff.	86.5	**Power Factor**	76	**Line-line Res. @ 25ºC**	22 Ω
Rating - Duty			40C AMB-CONT	**Temp. Rise @ Rated Load**	34°C
S.F. Amps				**Temp. Rise @ S.F. Load**	40°C
				Locked-rotor Power Factor	61
				Rotor inertia	0.159 lb-ft²

Load Characteristics 575 V, 60 Hz, 1.5 HP

% of Rated Load	**25**	**50**	**75**	**100**	**125**	**150**	**S.F.**
Power Factor	35	54	67	76	81	84	79
Efficiency	75.8	83.9	86.1	86.4	85.5	84.2	85.9
Speed	1791	1784	1776	1768	1758	1748	1762
Line amperes	1.1	1.24	1.45	1.72	2.03	2.38	1.91

ABB Motors and Mechanical Inc.

WINDING # 05WGX559

1.5 HP 3 PH 60 HZ 1768 RPM 575 V 0522M

Typical performance - not guaranteed values.

TORQUES(LB-FT): PO=16.7 PU=9.8 LR=11.4 LRA=14.2

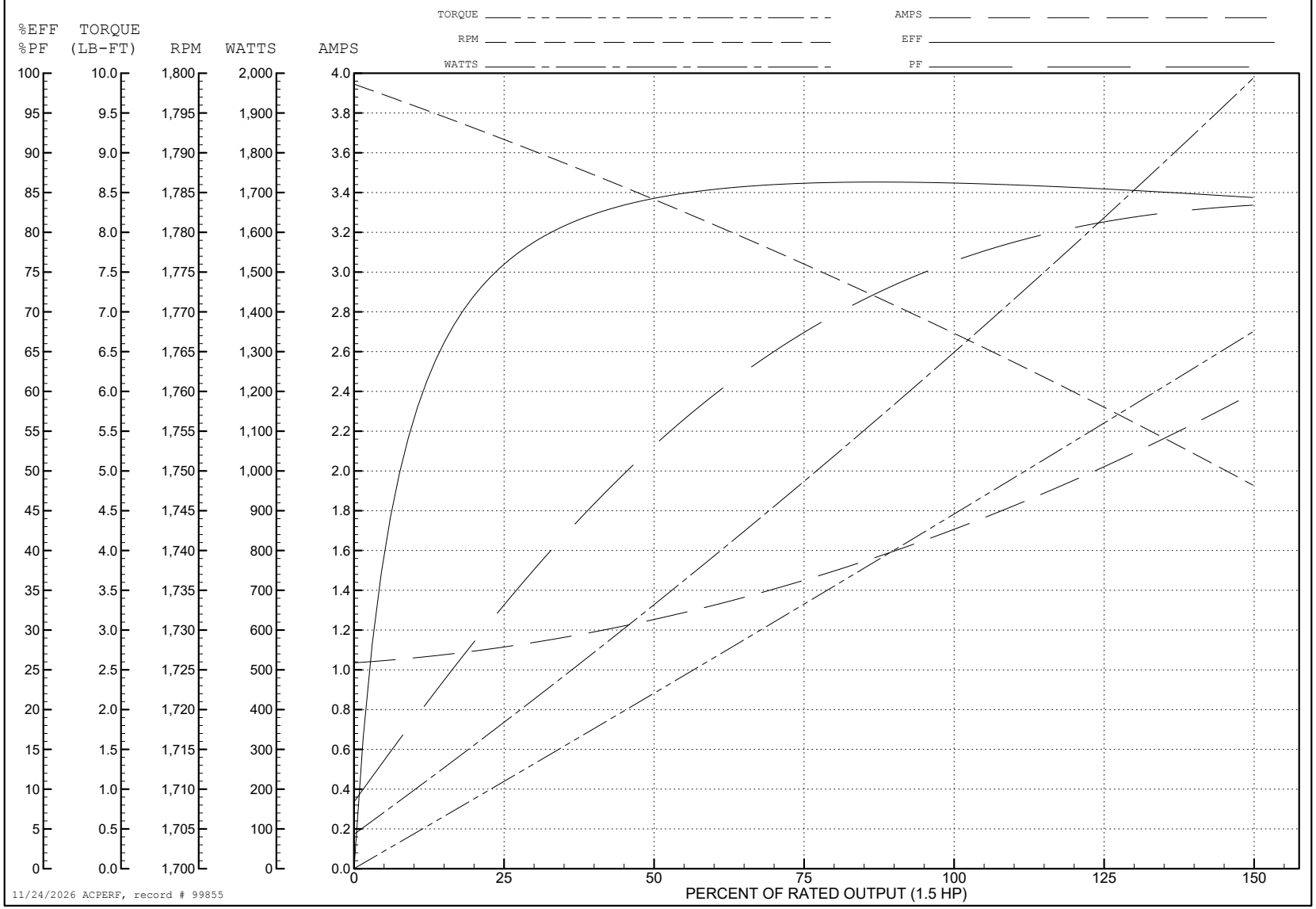

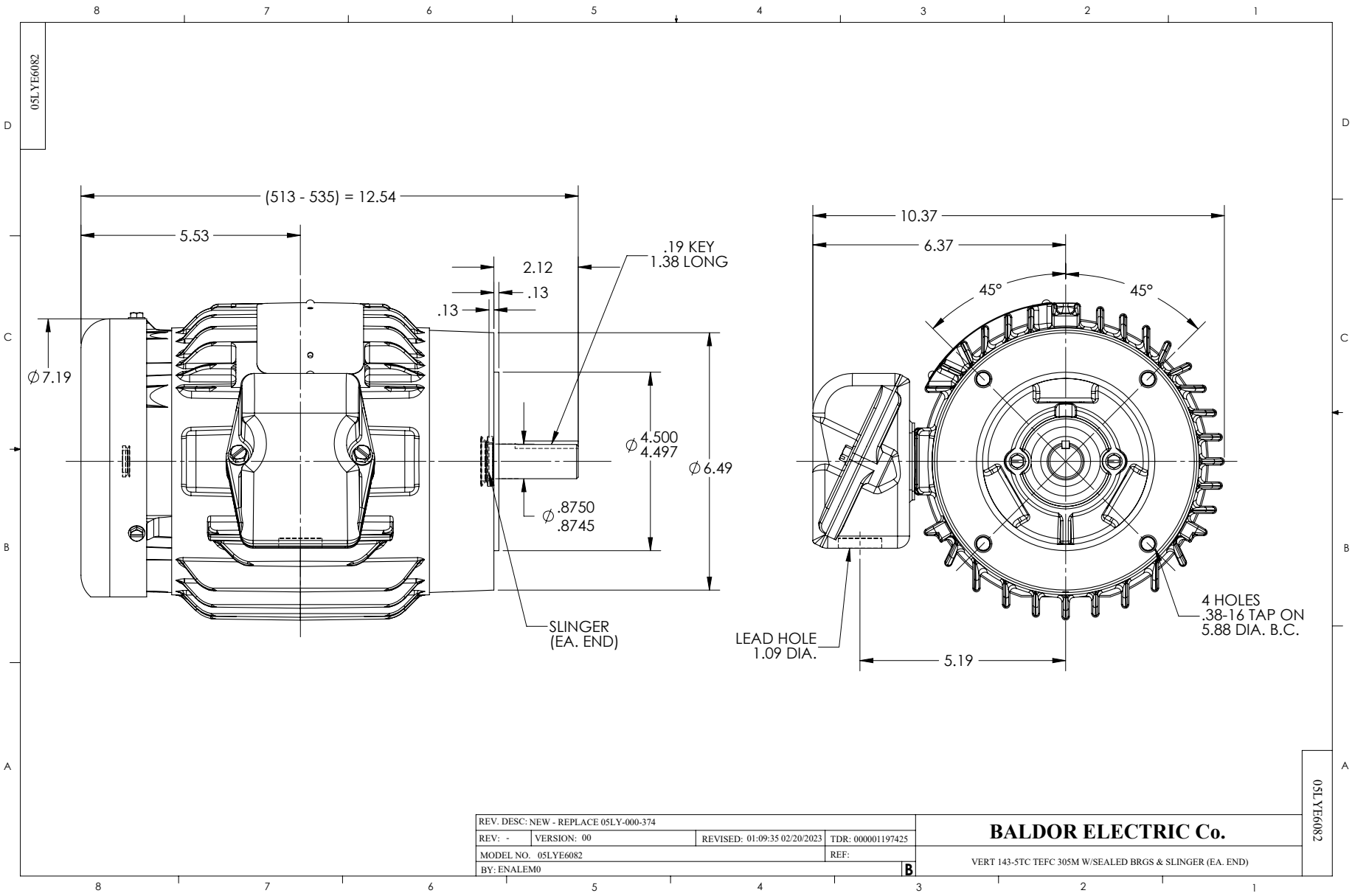
05LYE6082
(513 - 535) = 12.54
5.53
2.12
.13
.13
.19 KEY
1.38 LONG
∅7.19
∅4.500
4.497
∅6.49
∅.8750
.8745
SLINGER
(EA. END)
10.37
6.37
45°
45°
4 HOLES
.38-16 TAP ON
5.88 DIA. B.C.
LEAD HOLE
1.09 DIA.
5.19
REV. DESC: NEW - REPLACE 05LY-000-374
REV: -
VERSION: 00
REVISED: 01:09:35 02/20/2023
TDR: 000001197425
MODEL NO. 05LYE6082
REF:
BY: ENALEM0
B
BALDOR ELECTRIC Co.
VERT 143-5TC TEFC 305M W/SEALED BRGS & SLINGER (EA. END)
05LYE6082

CD0006

TYPICAL WYE–CONNECTED MOTOR

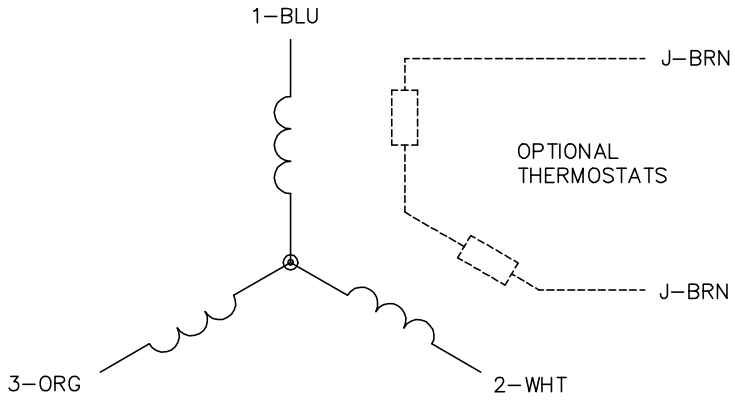

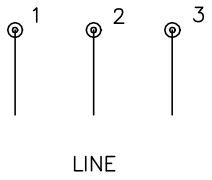

TYPICAL DELTA–CONNECTED MOTOR

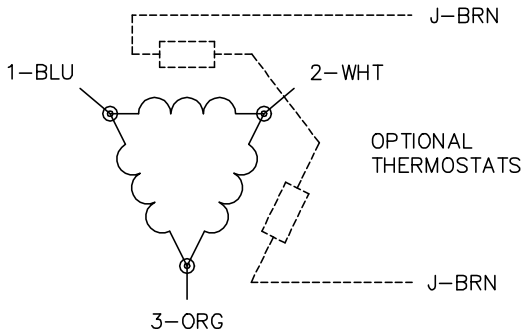

NOTES:

1. THREE LEAD MOTOR MAY BE EITHER WYE CONNECTED OR DELTA CONNECTED.
2. INTERCHANGE ANY TWO LINE LEADS TO REVERSE ROTATION.
3. OPTIONAL THERMOSTATS ARE PROVIDED WHEN SPECIFIED.
4. ACTUAL NUMBER OF INTERNAL PARALLEL CIRCUITS MAY VARY.
5. LEAD COLORS ARE OPTIONAL. LEADS MUST BE NUMBERED AS SHOWN.

CD0006

REV. DESC: ADD CLASS CONN00000007		
REV. LTR: E	VERSION: 01	TDR: 000001099922
FILE: \AAA\00005\141	REVISED: 10:24:49 02/19/2019	BY: ENBRIR0
MTL: –		

BALDOR - RELIANCE®

3PH, SV, 3 LEADS, WYE OR DELTA CONNECTED

SH 1 of 1