37LYT656

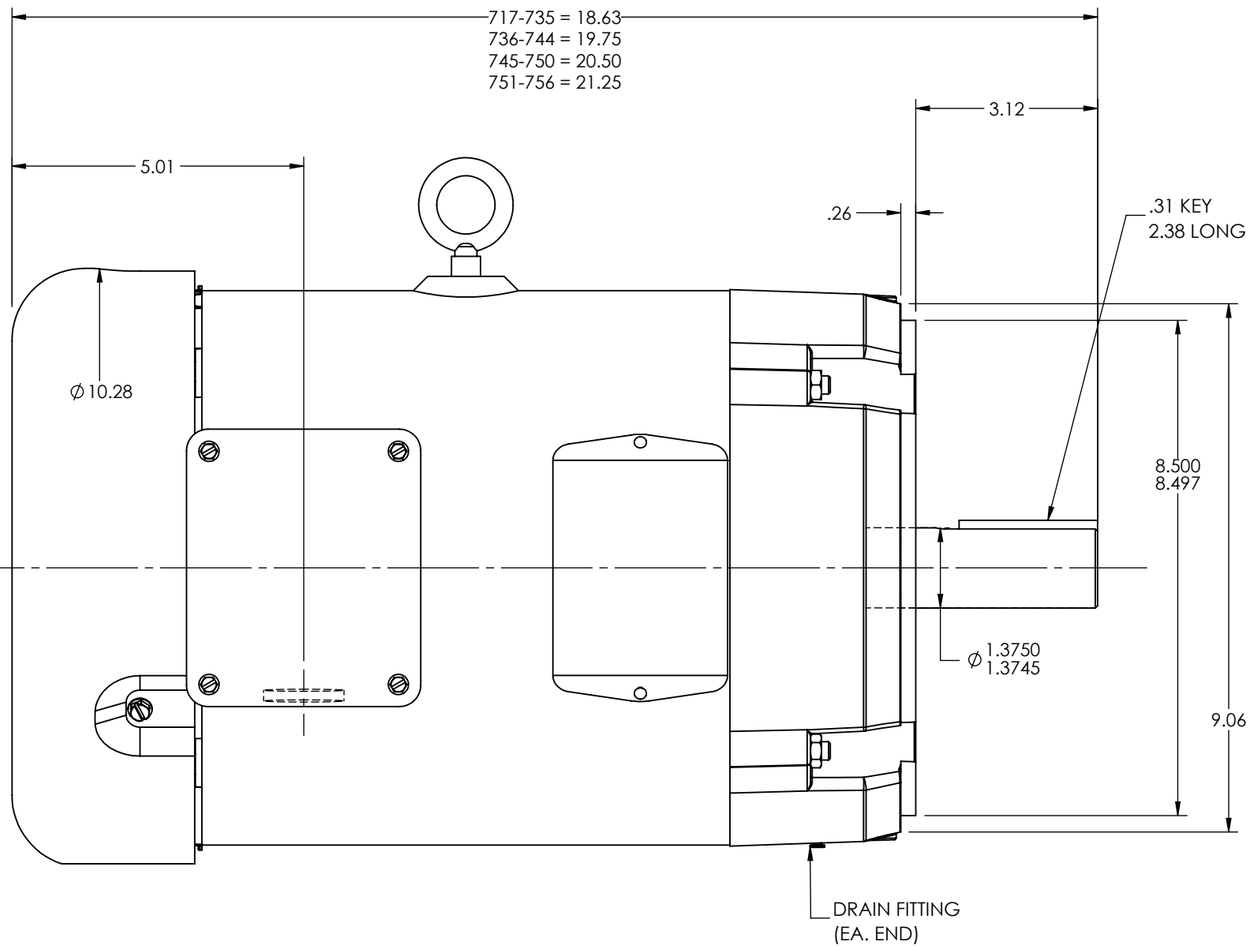

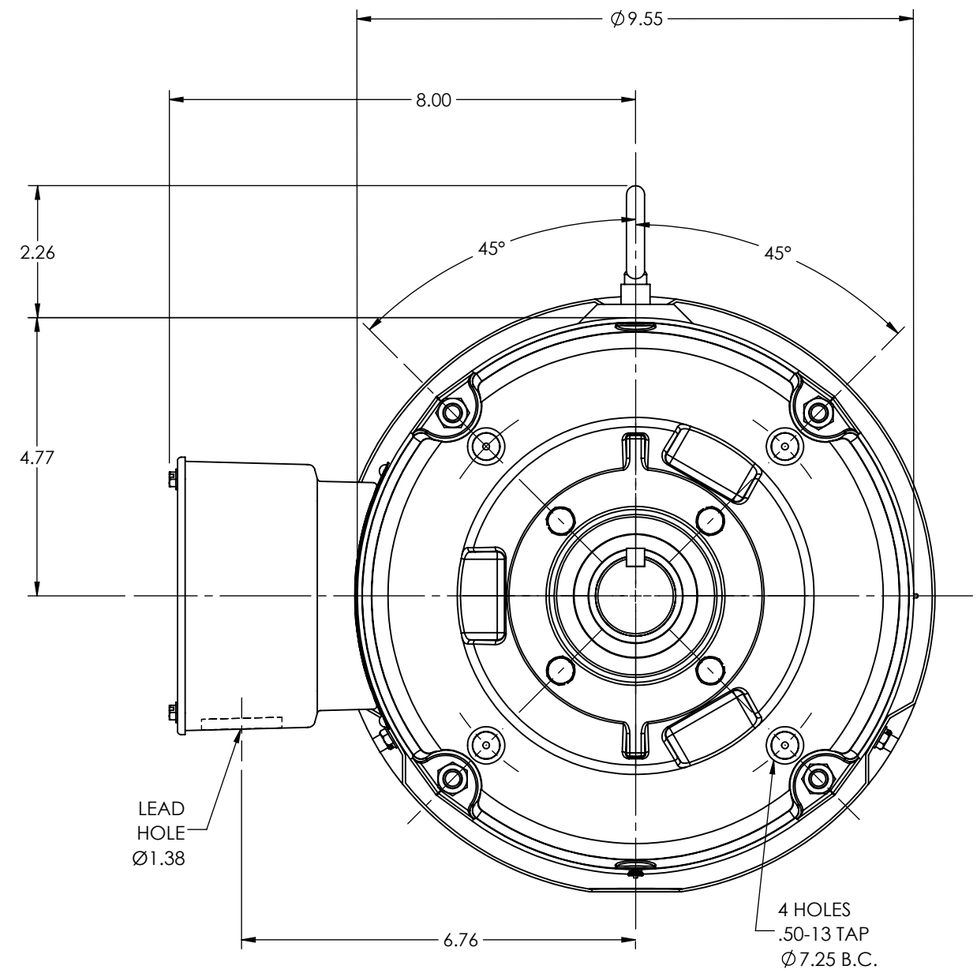

CUSTOMER IS RESPONSIBLE FOR DETERMINING THAT THE PRODUCT WILL PERFORM SUITABLY IN THE INTENDED APPLICATION

REV. DESC: NEW			
REV: -	VERSION: 00	REVISED: 07:30:09 01/04/2024	TDR: 000001222999
MODEL NO. 37LYT656			REF: -
BY: USALMAZ			B

BALDOR - RELIANCE®

VER 213-5TC TEFC 37M IP54, 'A64 NP

37LYT656