Customer information packet

VSPM3555T

2HP, 3475RPM, 3PH, 60HZ, 145TC, 3532M, TEFC, F1
Class - None
Division - Not Applicable

Copyright © All product information within this document is subject to ABB Motors and Mechanical Inc. copyright © protection, unless otherwise noted.
10/18/2026 4:45:26 PM

Specifications

B

Enclosure	TEFC
Frame	145TC
Frame Material	Steel
Frequency	60.00 Hz
Haz Area Class and Group	None
Haz Area Division	Not Applicable
Motor Letter Type	Three Phase
Output @ Frequency	2.000 HP @ 60 HZ
Phase	3
Synchronous Speed @ Frequency	3600 RPM @ 60 HZ
Voltage @ Frequency	230.0 V @ 60 HZ
	460.0 V @ 60 HZ
Agency Approvals	WEEE
	NEMA PREMIUM 4
Ambient Temperature	40 °C
Auxiliary Box	NO AUXILLARY BOX
Auxiliary Box Lead Termination	None
Base Indicator	No Mounting
Bearing Grease Type	Polyrex EM (-20F +300F)
Blower	None
Current @ Voltage	2.400 A @ 460.0 V
	4.800 A @ 230.0 V
Design Code	B
Drip Cover	No Drip Cover
Duty Rating	CONT
Efficiency @ 100% Load	86.5 %
Electrically Isolated Bearing	Not Electrically Isolated
Feedback Device	NO FEEDBACK
Front Shaft Indicator	None
Heater Indicator	No Heater
High Voltage Full Load Amps	2.4 a
Insulation Class	H

Part Detail

Revision	E
Type	AC
Mech. spec.	35E6391
Base	
Status	PRD/A
Elec. spec.	35WGK113
Layout	35LYE6391
Eff. date	11-19-2025
CD Diagram	CD0005
Poles	02
Leads	9#18
Proprietary	False
Created date	01-08-2024

Inverter Code	Inverter Duty
KVA Code	L
Lifting Lugs	No Lifting Lugs
Locked Bearing Indicator	Locked Bearing
Max Speed	6000 rpm
Motor Lead Quantity/Wire Size	9 @ 18 AWG
Motor Lead Termination	Flying Leads
Motor Standards	NEMA
Motor Type	3532M
Mounting Arrangement	F1
Number of Poles	2
Overall Length	14.19 IN
Power Factor	89
Product Family	General Purpose
Pulley End Bearing Type	Ball
Pulley Face Code	C-Face
Pulley Shaft Indicator	Standard
Rodent Screen	None
RoHS Status	ROHS COMPLIANT
Service Factor	1.00
Shaft Diameter	0.875 IN
Shaft Ground Indicator	No Shaft Grounding
Shaft Rotation	Reversible
Shaft Slinger Indicator	No Slinger
Speed	3475 rpm
Speed Code	Single Speed
Starting Method	Direct on line
Thermal Device - Bearing	None
Thermal Device - Winding	None
Vibration Sensor Indicator	No Vibration Sensor
Winding Thermal 1	None
Winding Thermal 2	None

Nameplate

NP4423A01A01L											
CAT #	VSPM3555T			**WGT**	50	**LBS**					
SPEC	35E6391K113			**ENCL**	TEFC						
SER #				**CC**	010A	**IP**	54				
HP	2		**MAG CUR**	1.8/.9							
VOLTS	230/460					**NEMA NOM. EFF**	86.5				
AMPS	4.8/2.4					**PF**	89				
RATING	40C AMB-CONT										
RPM	3475					**MAX RPM**	6000				
FRAME	145TC	**HZ**	60	**CODE**	L	**CLASS**	H				
SER.F.	1.00	**SF AMP**				**PH**	3	**DES**	B		
DE	6205		**ODE**	6203							
LUBRICATION	POLYREX EM										
ID LOGO		**INVERTER TYPE**		**VPWM**		**CHP**	60	**TO**	90		1.5:1
ID LOGO	**WK2**	0.09	**CT**	6	**TO**	60		10:1			
ID LOGO	**SL HZ**	2.1	**VT**	3	**TO**	60		20:1			
						QR					
YR											

AC Induction Motor Performance Data
Record # 93652
Typical performance - not guaranteed values

Winding: 35WGK113-R001	**Type:** 3532M	**Enclosure:** TEFC

Nameplate Data			
Rated Output (HP)			2
Volts			230/460
Full Load Amps			4.8/2.4
R.P.M.			3475
Hz	60	**Phase**	3
NEMA Design Code	B	**KVA Code**	L
Service Factor (S.F.)			1
NEMA Nom. Eff.	86.5	**Power Factor**	89
Rating - Duty			40C AMB-CONT

460 V, 60 Hz: High Voltage Connection	
Full Load Torque	3.01 LB-FT
Start Configuration	direct on line
Breakdown Torque	12.6 LB-FT
Pull-up Torque	7.1 LB-FT
Locked-rotor Torque	10.9 LB-FT
Starting Current	24.5 A
No-load Current	0.879 A
Line-line Res. @ 25ºC	7.06 Ω
Temp. Rise @ Rated Load	51°C
Locked-rotor Power Factor	47.3
Rotor inertia	0.0885 lb-ft²

Load Characteristics 460 V, 60 Hz, 2 HP

% of Rated Load	**25**	**50**	**75**	**100**	**125**	**150**
Power Factor	55	76	84	89	91	92
Efficiency	79	86.4	87.1	87	85.9	84.5
Speed	3568	3538	3508	3476	3439	3400
Line amperes	1.06	1.46	1.91	2.41	3	3.61

ABB Motors and Mechanical Inc.

WINDING # 35WGK113

2 HP 3 PH 60 HZ 3475 RPM 460 V 3532M

Typical performance - not guaranteed values.

TORQUES(LB-FT): PO=12.6 PU=7.1 LR=10.9 LRA=24.5

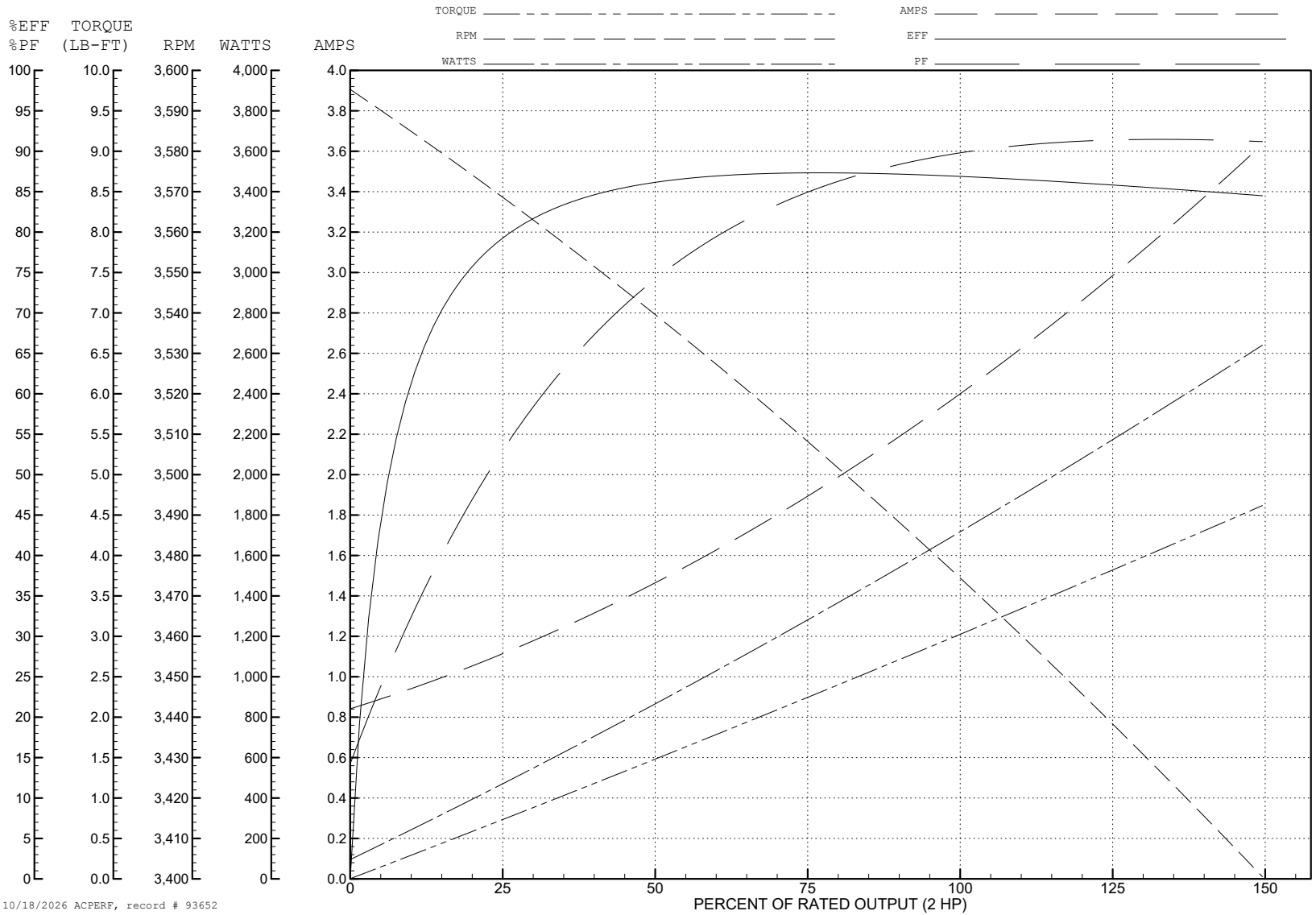

10/18/2026 ACPERF, record # 93652

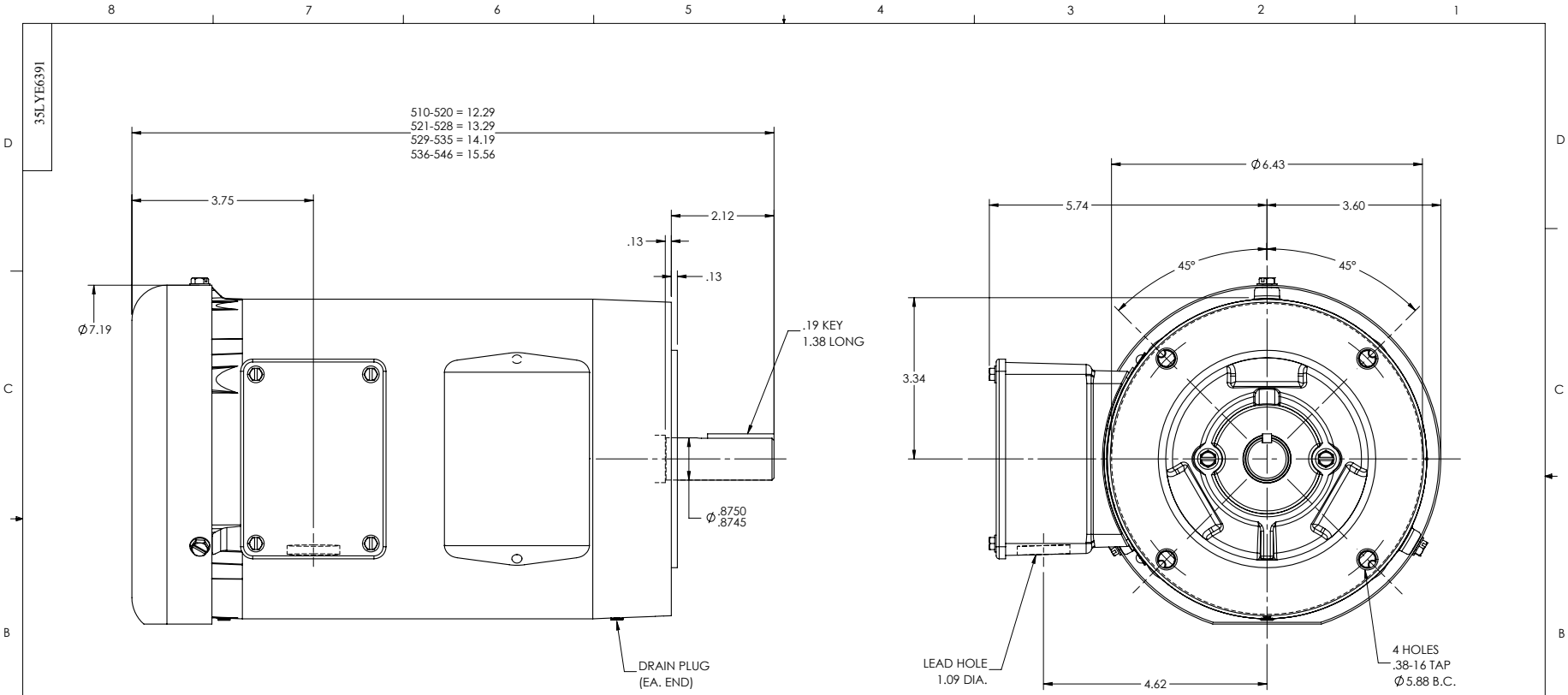

CUSTOMER IS RESPONSIBLE FOR DETERMINING THAT THE PRODUCT WILL PERFORM SUITABLY IN THE INTENDED APPLICATION

REV. DESC: NEW				BALDOR - RELIANCE®
REV: -	VERSION: 00	REVISED: 09:07:51 01/08/2024	TDR: 000001223001	
MODEL NO. 35LYE6391			REF: -	VERT 143-5TC TEFC 35M W/GLF BRGS, 'A64 NP, IP54
BY: USALMAZ			B	

35LYE6391

CD0005

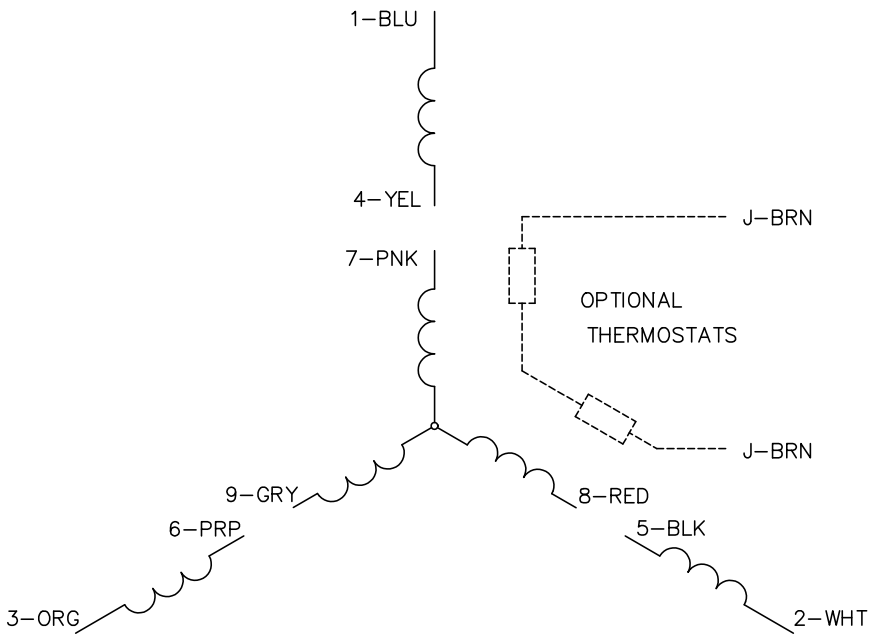

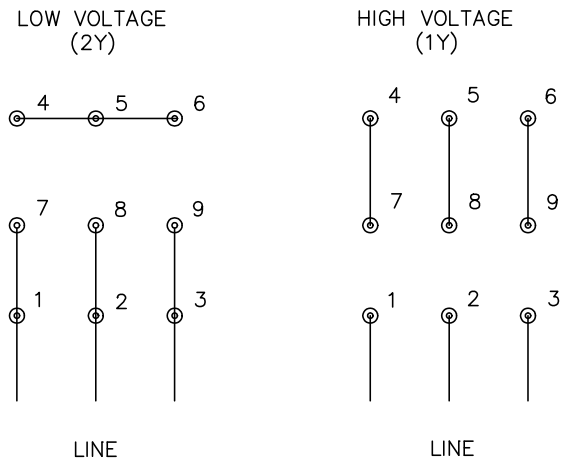

NOTES:

1. INTERCHANGE ANY TWO LINE LEADS TO REVERSE ROTATION.
2. OPTIONAL THERMOSTATS ARE PROVIDED WHEN SPECIFIED.
3. ACTUAL NUMBER OF INTERNAL PARALLEL CIRCUITS MAY BE A MULTIPLE OF THOSE SHOWN ABOVE.
4. LEAD COLORS ARE OPTIONAL. LEADS MUST ALWAYS BE NUMBERED AS SHOWN.

REV. DESC: REVISE TO SHOW OPTIONAL COLORS			
REV. LTR: E	BY: JLP	REVISED: 01/19/99 10:15	TDR: 0171435
CD0005		FILE: AAA00005140	MDL: –
		MTL: –	

BALDOR ELECTRIC Co.

3PH, DV, 9 LEADS

CD0005