Customer information packet

VSPM3539

.5HP, 1140RPM, 3PH, 60HZ, 56C, 3436M, TEFC, F1
Class - None
Division - Not Applicable

Copyright © All product information within this document is subject to ABB Motors and Mechanical Inc. copyright © protection, unless otherwise noted.
10/18/2026 9:08:26 PM

Specifications

Enclosure	TEFC
Frame	56C
Frame Material	Steel
Frequency	60.00 Hz
Haz Area Class and Group	None
Haz Area Division	Not Applicable
Motor Letter Type	Three Phase
Output @ Frequency	.500 HP @ 60 HZ
Phase	3
Synchronous Speed @ Frequency	1200 RPM @ 60 HZ
Voltage @ Frequency	230.0 V @ 60 HZ 460.0 V @ 60 HZ
Agency Approvals	C UR US WEEE
Ambient Temperature	40 °C
Auxiliary Box	NO AUXILLARY BOX
Auxiliary Box Lead Termination	None
Base Indicator	No Mounting
Bearing Grease Type	Polyrex EM (-20F +300F)
Blower	None
Current @ Voltage	2.000 A @ 230.0 V 1.000 A @ 460.0 V
Design Code	B
Drip Cover	No Drip Cover
Duty Rating	CONT
Efficiency @ 100% Load	78.5 %
Electrically Isolated Bearing	Not Electrically Isolated
Feedback Device	NO FEEDBACK
Front Shaft Indicator	None
Heater Indicator	No Heater
High Voltage Full Load Amps	1.0 a
Insulation Class	F

Part Detail

Revision	B
Type	AC
Mech. spec.	34N585
Base	
Status	PRD/A
Elec. spec.	34WGR776
Layout	34LYN585
Eff. date	03-04-2025
CD Diagram	CD0005
Poles	06
Leads	9#18
Proprietary	False
Created date	03-07-2024

Inverter Code	Not Inverter
KVA Code	K
Lifting Lugs	No Lifting Lugs
Locked Bearing Indicator	Locked Bearing
Motor Lead Quantity/Wire Size	9 @ 18 AWG
Motor Lead Termination	Flying Leads
Motor Standards	NEMA
Motor Type	3436M
Mounting Arrangement	F1
Number of Poles	6
Overall Length	13.72 IN
Power Factor	61
Product Family	General Purpose
Pulley End Bearing Type	Ball
Pulley Face Code	C-Face
Pulley Shaft Indicator	Standard
Rodent Screen	None
Service Factor	1.25
Shaft Diameter	0.625 IN
Shaft Ground Indicator	No Shaft Grounding
Shaft Rotation	Reversible
Shaft Slinger Indicator	No Slinger
Speed	1140 rpm
Speed Code	Single Speed
Starting Method	Direct on line
Thermal Device - Bearing	None
Thermal Device - Winding	None
Vibration Sensor Indicator	No Vibration Sensor
Winding Thermal 1	None
Winding Thermal 2	None

Nameplate

NP4558A02LL							
CAT #	VSPM3539	**WGT**	40	**LBS**			
SER #		**ENCL**	TEFC				
SPEC	34N585R776	**CC**	010A	**IP**	54		
HP	.5	**NEMA NOM. EFF**	78.5				
VOLTS	230/460	**PF**	61				
AMPS	2/1						
RATING	40C AMB-CONT						
RPM	1140	**PH**	3	**DES**	B		
FRAME	56C	**HZ**	60	**CODE**	K	**CLASS**	F
SER.F.	1.25	**SF AMP**	2.2/1.1				
DE	6203	**ODE**	6203				
GREASE	POLYREX EM						
		QR					
YR							

AC Induction Motor Performance Data
Record # 100838
Preliminary Data Sheet

Winding: 34WGR776-R002	**Type:** 3436M	**Enclosure:** TEFC

Nameplate Data				**460 V, 60 Hz: High Voltage Connection**	
Rated Output (HP)			.5	**Full Load Torque**	2.38 LB-FT
Volts			230/460	**Start Configuration**	direct on line
Full Load Amps			2/1	**Breakdown Torque**	8.4 LB-FT
R.P.M.			1140	**Pull-up Torque**	5.4 LB-FT
Hz	60	**Phase**	3	**Locked-rotor Torque**	6.5 LB-FT
NEMA Design Code	B	**KVA Code**	K	**Starting Current**	5.4 A
Service Factor (S.F.)			1.25	**No-load Current**	0.73 A
NEMA Nom. Eff.	78.5	**Power Factor**	61	**Line-line Res. @ 25ºC**	25.8 Ω
Rating - Duty			40C AMB-CONT	**Temp. Rise @ Rated Load**	40°C
S.F. Amps			2.2/1.1	**Temp. Rise @ S.F. Load**	67°C
				Locked-rotor Power Factor	53
				Rotor inertia	0.0855 lb-ft²

Load Characteristics 460 V, 60 Hz, 0.5 HP

% of Rated Load	**25**	**50**	**75**	**100**	**125**	**150**	**S.F.**
Power Factor	24	39	52	61	69	74	69
Efficiency	67	77	79.2	78.5	76.5	73.4	76.5
Speed	1185	1171	1156	1137	1117	1091	1117
Line amperes	0.75	0.8	0.89	1	1.13	1.3	1.13

ABB Motors and Mechanical Inc.

WINDING # 34WGR776

0.5 HP 3 PH 60 HZ 1140 RPM 460 V 3436M

Typical performance - not guaranteed values.

TORQUES(LB-FT): PO=8.4 PU=5.4 LR=6.5 LRA=5.4

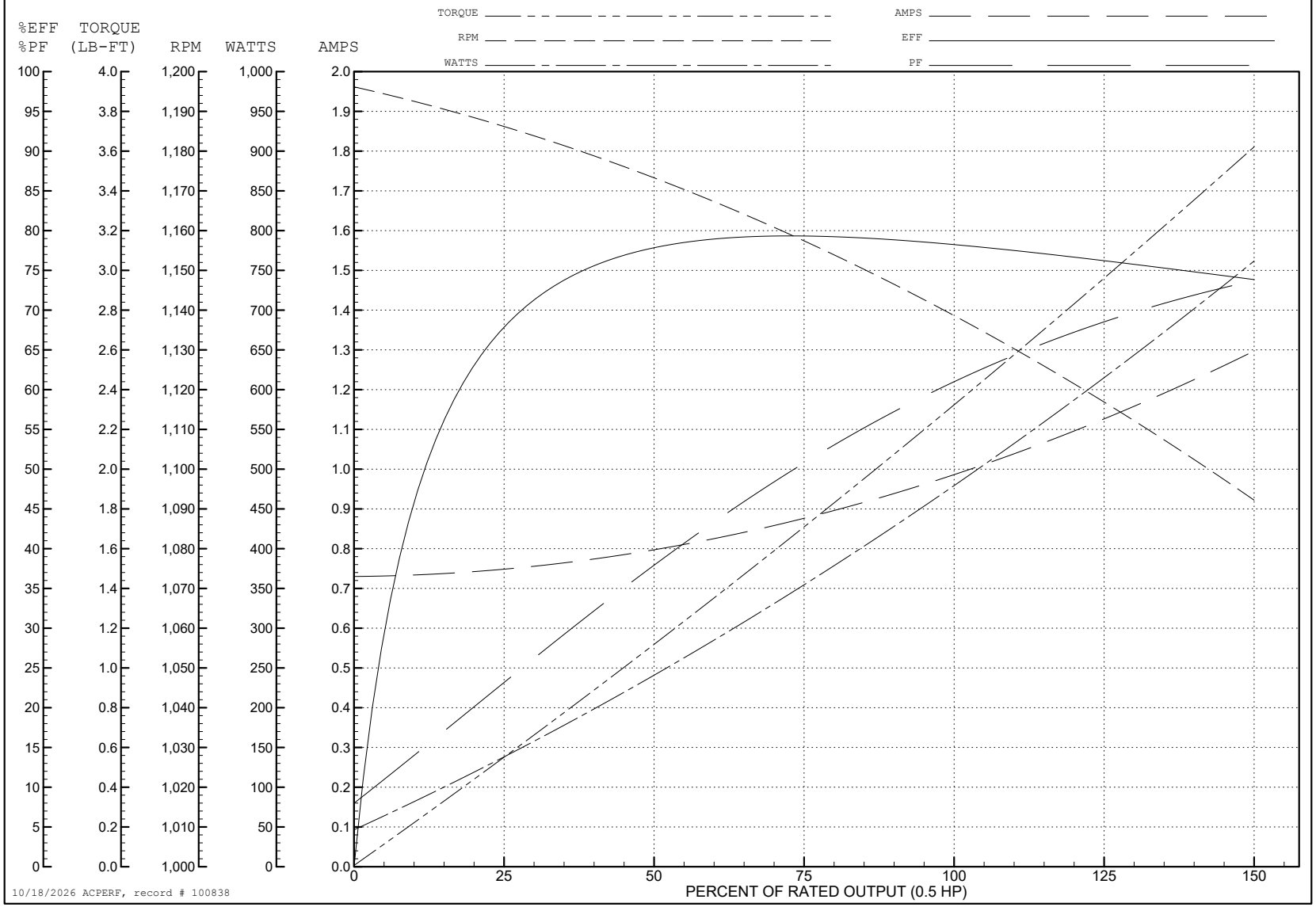

10/18/2026 ACPERF, record # 100838

34LYN585

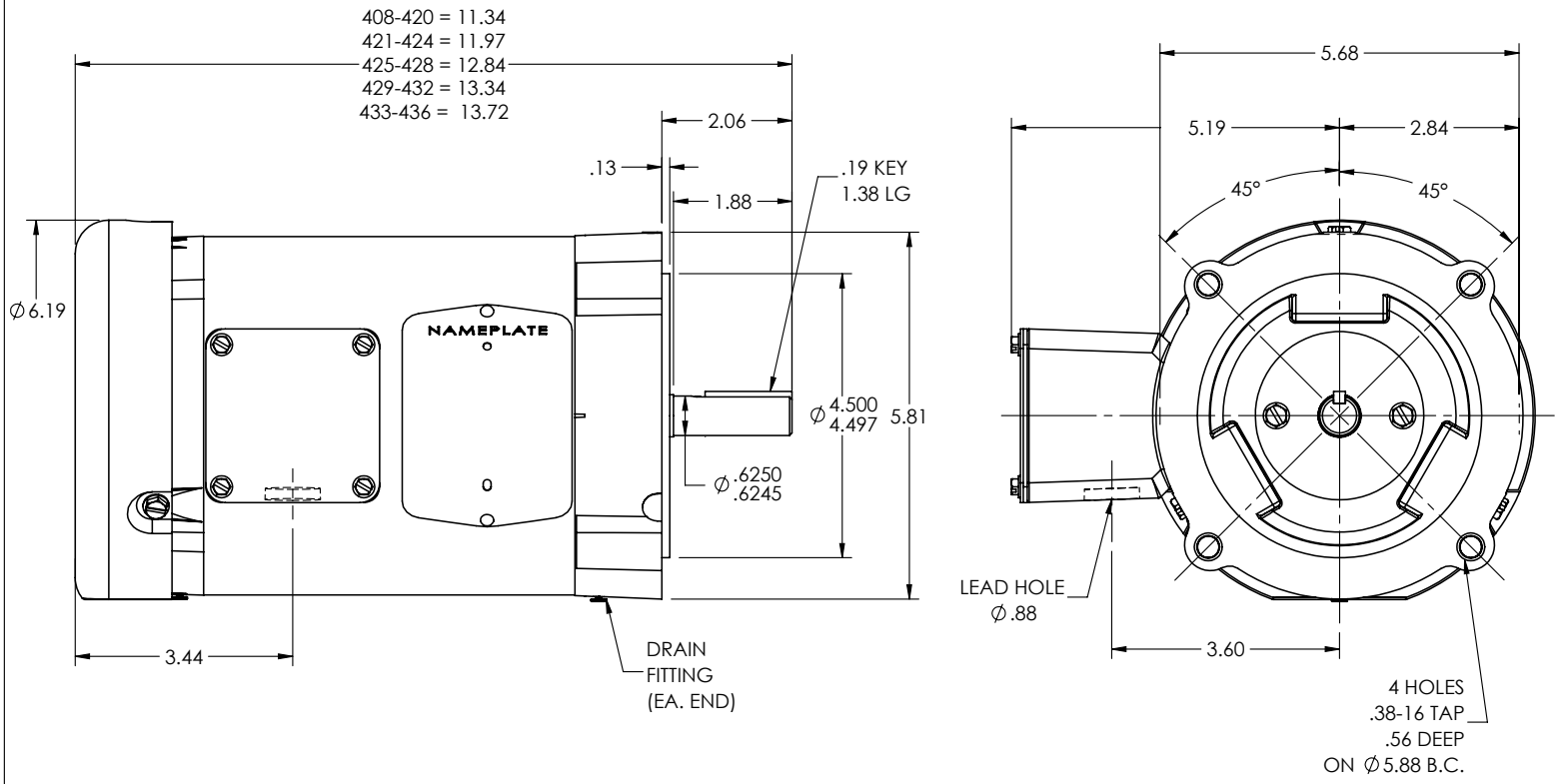

CUSTOMER IS RESPONSIBLE FOR DETERMINING THAT THE PRODUCT WILL PERFORM SUITABLY IN THE INTENDED APPLICATION

REV. DESC: NEW				BALDOR - RELIANCE®
REV: -	VERSION: 00	REVISED: 01:20:17 03/05/2024	TDR: 000001227262	
34LYN585	MODEL NO. 34LYN585		REF: -	VERT 34M NEMA 56C TEFC W/DRAINS (IP54)
	BY: USALMAZ			

34LYN585

CD0005

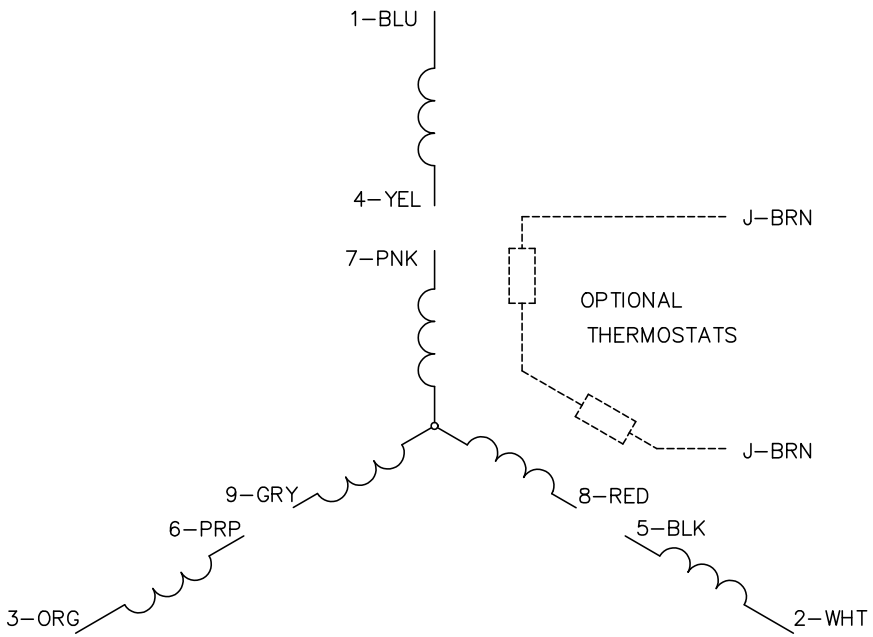

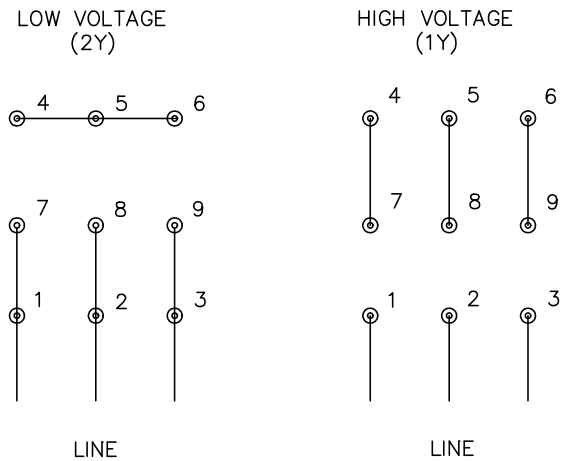

NOTES:

1. INTERCHANGE ANY TWO LINE LEADS TO REVERSE ROTATION.
2. OPTIONAL THERMOSTATS ARE PROVIDED WHEN SPECIFIED.
3. ACTUAL NUMBER OF INTERNAL PARALLEL CIRCUITS MAY BE A MULTIPLE OF THOSE SHOWN ABOVE.
4. LEAD COLORS ARE OPTIONAL. LEADS MUST ALWAYS BE NUMBERED AS SHOWN.

CD0005

REV. DESC: REVISE TO SHOW OPTIONAL COLORS			
REV. LTR: E	BY: JLP	REVISED: 01/19/99 10:15	TDR: 0171435
CD0005		FILE: AAA00005140	MDL: –
		MTL: –	

BALDOR ELECTRIC Co.

3PH, DV, 9 LEADS