Customer information packet

VSPM3537

.5HP, 3450RPM, 3PH, 60HZ, 56C, 3420M, TEFC, F1
Class - None
Division - Not Applicable

Copyright © All product information within this document is subject to ABB Motors and Mechanical Inc. copyright © protection, unless otherwise noted.
10/19/2026 11:03:56 PM

Specifications

Enclosure	TEFC
Frame	56C
Frame Material	Steel
Frequency	60.00 Hz
Haz Area Class and Group	None
Haz Area Division	Not Applicable
Motor Letter Type	Three Phase
Output @ Frequency	.500 HP @ 60 HZ
Phase	3
Synchronous Speed @ Frequency	3600 RPM @ 60 HZ
Voltage @ Frequency	230.0 V @ 60 HZ 460.0 V @ 60 HZ
Agency Approvals	C UR US WEEE
Ambient Temperature	40 °C
Auxiliary Box	NO AUXILLARY BOX
Auxiliary Box Lead Termination	None
Base Indicator	No Mounting
Bearing Grease Type	Polyrex EM (-20F +300F)
Blower	None
Current @ Voltage	.800 A @ 460.0 V 1.600 A @ 230.0 V 1.800 A @ 208.0 V
Design Code	B
Drip Cover	No Drip Cover
Duty Rating	CONT
Efficiency @ 100% Load	77.0 %
Electrically Isolated Bearing	Not Electrically Isolated
Feedback Device	NO FEEDBACK
Front Shaft Indicator	None
Heater Indicator	No Heater
High Voltage Full Load Amps	0.8 a

Part Detail

Revision	B
Type	AC
Mech. spec.	34N585
Base	
Status	PRD/A
Elec. spec.	34WG3229
Layout	34LYN585
Eff. date	03-04-2025
CD Diagram	CD0005
Poles	02
Leads	9#18
Proprietary	False
Created date	03-07-2024

Insulation Class	F
Inverter Code	Not Inverter
KVA Code	N
Lifting Lugs	No Lifting Lugs
Locked Bearing Indicator	Locked Bearing
Motor Lead Quantity/Wire Size	9 @ 18 AWG
Motor Lead Termination	Flying Leads
Motor Standards	NEMA
Motor Type	3420M
Mounting Arrangement	F1
Number of Poles	2
Overall Length	11.34 IN
Power Factor	74
Product Family	General Purpose
Pulley End Bearing Type	Ball
Pulley Face Code	C-Face
Pulley Shaft Indicator	Standard
Rodent Screen	None
Service Factor	1.25
Shaft Diameter	0.625 IN
Shaft Ground Indicator	No Shaft Grounding
Shaft Rotation	Reversible
Shaft Slinger Indicator	No Slinger
Speed	3450 rpm
Speed Code	Single Speed
Starting Method	Direct on line
Thermal Device - Bearing	None
Thermal Device - Winding	None
Vibration Sensor Indicator	No Vibration Sensor
Winding Thermal 1	None
Winding Thermal 2	None

Nameplate

NP4558A02LL							
CAT #	VSPM3537	**WGT**	27	**LBS**			
SER #		**ENCL**	TEFC				
SPEC	34N585-3229	**CC**	010A	**IP**	54		
HP	.5	**NEMA NOM. EFF**	77				
VOLTS	230/460	**PF**	74				
AMPS	1.6/.8						
RATING	40C AMB-CONT						
RPM	3450	**PH**	3	**DES**	B		
FRAME	56C	**HZ**	60	**CODE**	N	**CLASS**	F
SER.F.	1.25	**SF AMP**	1.8/.9				
DE	6203	**ODE**	6203				
GREASE	POLYREX EM						
		QR					
YR							

AC Induction Motor Performance Data
Record # 100840
Typical performance - not guaranteed values

Winding: 34WG3229-R019 **Type:** 3420M **Enclosure:** TEFC

Nameplate Data			
Rated Output (HP)			.5
Volts			230/460
Full Load Amps			1.6/.8
R.P.M.			3450
Hz	60	**Phase**	3
NEMA Design Code	B	**KVA Code**	N
Service Factor (S.F.)			1.25
NEMA Nom. Eff.	77	**Power Factor**	74
Rating - Duty			40C AMB-CONT
S.F. Amps			1.8/.9

460 V, 60 Hz: High Voltage Connection	
Full Load Torque	0.75 LB-FT
Start Configuration	direct on line
Breakdown Torque	4.7 LB-FT
Pull-up Torque	4 LB-FT
Locked-rotor Torque	4.4 LB-FT
Starting Current	7.4 A
No-load Current	0.49 A
Line-line Res. @ 25ºC	20.7 Ω
Temp. Rise @ Rated Load	48°C
Temp. Rise @ S.F. Load	57°C
Locked-rotor Power Factor	65.6
Rotor inertia	0.0186 lb-ft²

Load Characteristics 460 V, 60 Hz, 0.5 HP

% of Rated Load	25	50	75	100	125	150	S.F.
Power Factor	41	58	69	76	81	84	81
Efficiency	56.5	70.7	76.6	79.5	80.8	81.2	80.8
Speed	3568	3544	3519	3493	3466	3437	3466
Line amperes	0.52	0.58	0.67	0.77	0.88	1.01	0.88

ABB Motors and Mechanical Inc.

WINDING # 34WG3229

Typical performance - not guaranteed values.

0.5 HP 3 PH 60 HZ 3450 RPM 460 V 3420M

TORQUES(LB-FT): PO=4.7 PU=4 LR=4.4 LRA=7.4

TORQUE ____ ____ ____ ____ ____ ____ AMPS ____ ____ ____ ____ ____ ____

RPM ____ ____ ____ ____ ____ ____ EFF ____

WATTS ____ ____ ____ ____ ____ ____ PF ____ ____ ____

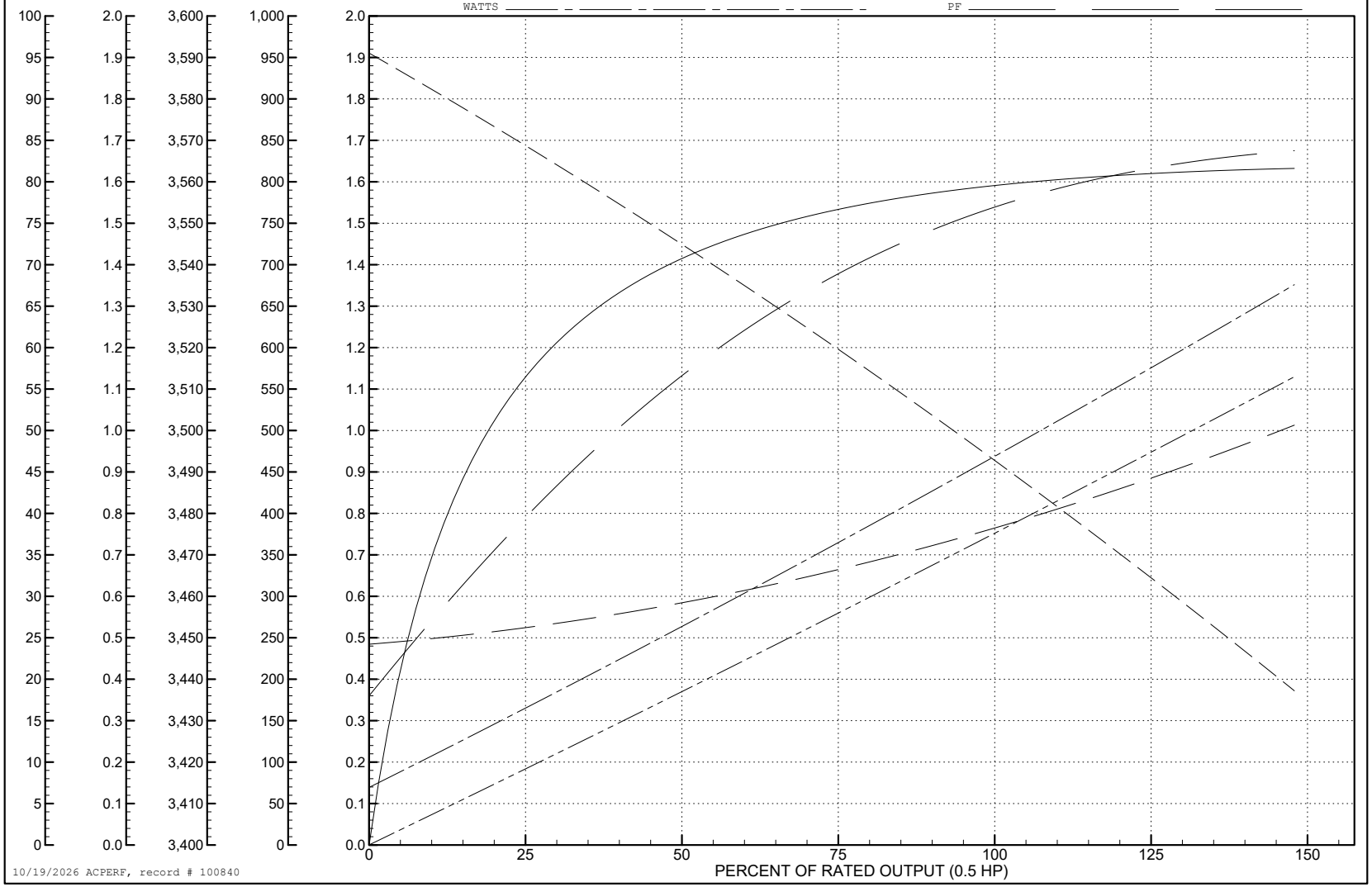

10/19/2026 ACPERF, record # 100840

34LYN585

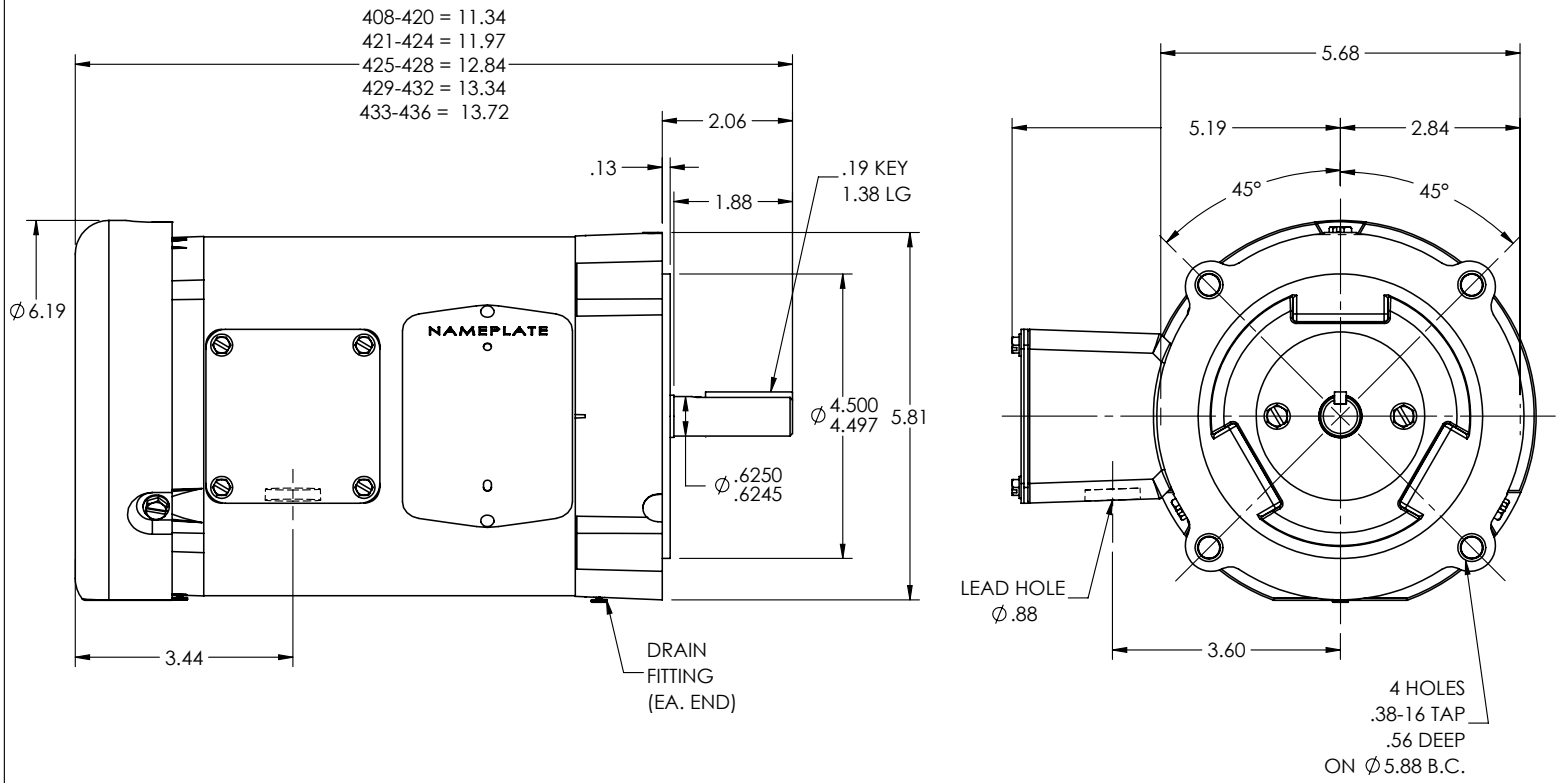

CUSTOMER IS RESPONSIBLE FOR DETERMINING THAT THE PRODUCT WILL PERFORM SUITABLY IN THE INTENDED APPLICATION

REV. DESC: NEW			
REV: -	VERSION: 00	REVISED: 01:20:17 03/05/2024	TDR: 000001227262
34LYN585	MODEL NO. 34LYN585		REF: -
	BY: USALMAZ		

BALDOR - RELIANCE®

VERT 34M NEMA 56C TEFC W/DRAINS (IP54)

34LYN585

CD0005

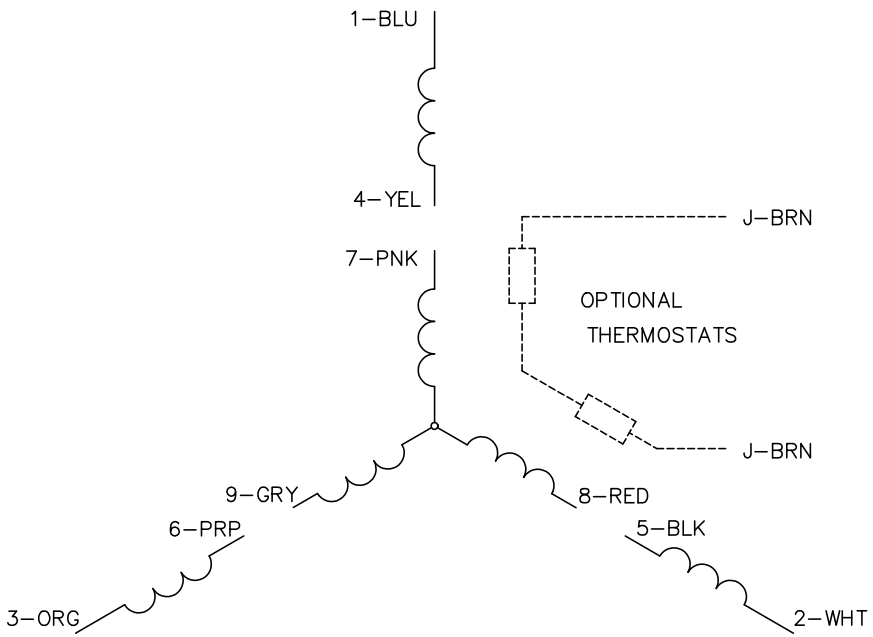

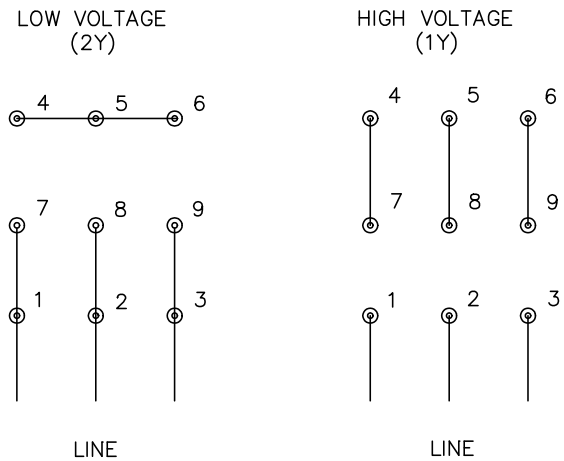

NOTES:

1. INTERCHANGE ANY TWO LINE LEADS TO REVERSE ROTATION.
2. OPTIONAL THERMOSTATS ARE PROVIDED WHEN SPECIFIED.
3. ACTUAL NUMBER OF INTERNAL PARALLEL CIRCUITS MAY BE A MULTIPLE OF THOSE SHOWN ABOVE.
4. LEAD COLORS ARE OPTIONAL. LEADS MUST ALWAYS BE NUMBERED AS SHOWN.

REV. DESC: REVISE TO SHOW OPTIONAL COLORS			
REV. LTR: E	BY: JLP	REVISED: 01/19/99 10:15	TDR: 0171435
CD0005		FILE: AAA00005140	MDL: –
		MTL: –	

BALDOR ELECTRIC Co.

3PH, DV, 9 LEADS

CD0005