34LYB063

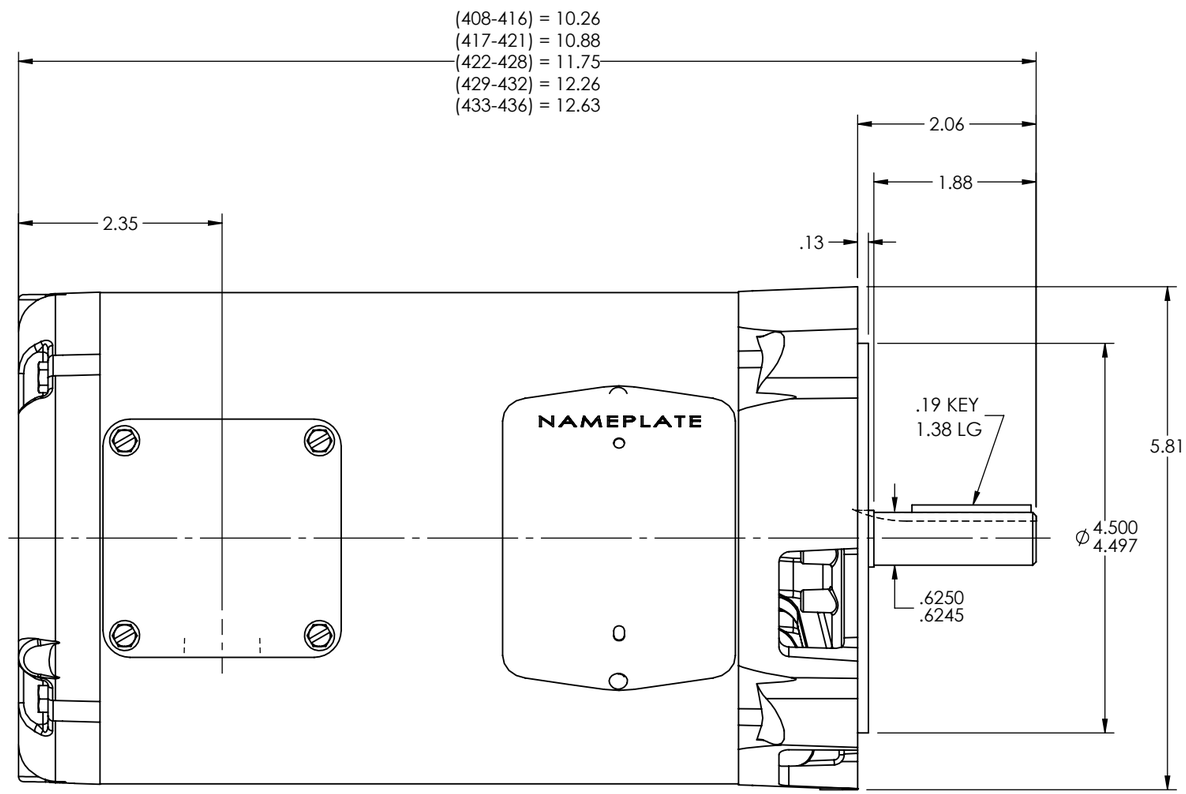

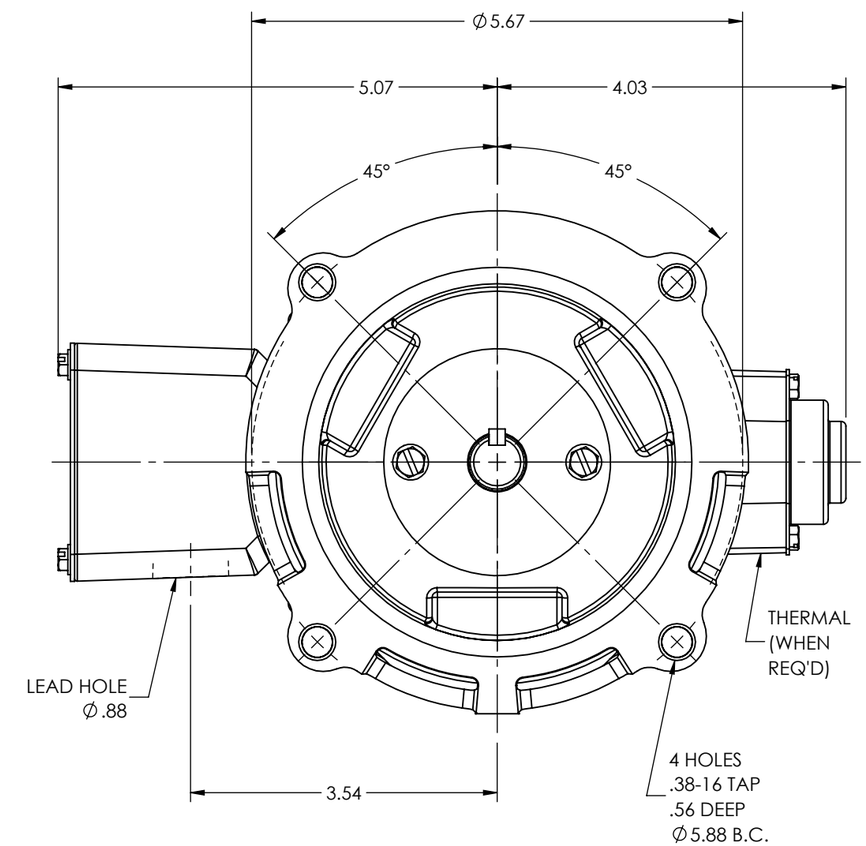

CUSTOMER IS RESPONSIBLE FOR DETERMINING THAT THE PRODUCT WILL PERFORM SUITABLY IN THE INTENDED APPLICATION

REV. DESC: CLEAN UP DIMENSIONING			
REV: F	VERSION: 04	REVISED: 03:40:52 04/11/2025	TDR: 000001253803
MODEL NO. 34LYB063			REF: -
BY: ENJEFD0			B

BALDOR - RELIANCE®

STD VERT 34M NEMA 56C OPEN

34LYB063