Customer information packet

VP3436D

.57/.75HP, 1750RPM, DC, D80D, 3428P, TEFC, F2
Class - None
Division -

Copyright © All product information within this document is subject to ABB Motors and Mechanical Inc. copyright © protection, unless otherwise noted.
11/27/2026 4:22:54 AM

Specifications

Armature Voltage	180 V
Base Speed	1750 rpm
Enclosure	TEFC
Frame	D80D
Frame Material	Steel
Haz Area Class and Group	None
Output Power	0.750 HP
Agency Approvals	CE
	CSA
	UR
Ambient Temperature	40 °C
Armature Current	3.7 a
Armature Inertia	10.926 lb-ft2
Base Indicator	Rigid
Bearing Grease Type	Polyrex EM (-20F +300F)
Drip Cover	No Drip Cover
Duty Rating	CONT
Feedback Device	NO FEEDBACK
Frame Prefix	D
Heater Indicator	No Heater
Lifting Lugs	No Lifting Lugs
Motor Lead Exit	Ko Box
Motor Lead Quantity/Wire Size	2 @ 14 AWG
Motor Lead Termination	Flying Leads
Motor Standards	IEC
Mounting Arrangement	B35
Overall Length	14.35 IN
Product Family	BISSIC
Pulley End Bearing Type	Sealed Bearing
Service Factor	1.00
Shaft Diameter	0.748 IN
Shaft Extension Location	Pulley End

Part Detail

Revision	R
Type	DC
Mech. spec.	34-6483
Base	
Status	PRD/A
Elec. spec.	34WG3946
Layout	34LY6483
Eff. date	10-25-2024
CD Diagram	CD0194
Poles	00
Leads	
Proprietary	False
Created date	01-01-0001

Shaft Ground Indicator	No Shaft Grounding
Shaft Rotation	Reversible
Shaft Slinger Indicator	No Slinger

Nameplate

NP1049L					
CAT.NO.	VP3436D				
SPEC.	34-6483-3946				
KW/HP	.57/.75 TE		**I.P.**	54	
RPM	1750 1/MIN KG19 IC411 TE				
IEC FRAME	D80D	**TYPE**	3428P		
ARM V	180		**ARM A**	3.7	
FLD V			**FLD A**		
INSUL	F	**AMB.**	40		
DUTY	CONT		**SUPPLY**	1.5	
BRG/DE	6206	**BRG/ODE**	6203		
BRUSHES	2/BP5000AW14				
			BLANK		
SER.					
BLANK	IEC60034-1;-5				
APRV-CE		**APRV-CSA**		**APRV-UL**	

DC Motor Performance Data
Record # 1048
Typical performance - not guaranteed values

Winding: 34WG3946-R001	**Type:** 3428P	**Enclosure:** TEFC

Nameplate Data	
Rated Output (HP)	0.75
R.P.M.	1750
Armature Volts	180
Armature Amps	3.7
Field Volts	
Field Amps	
Rating - Duty	40C AMB-CONT
Form Factor	1.5

General Characteristics	
Armature Resistance @ 25ºC	2.728 Ω
Armature Inductance	27.3166 mH

Load Characteristics at 180 Armature Volts

Load Point	**1**	**2**	**3**	**4**	**5**	**6**	**7**
Armature Amps	0.16	1.36	2.56	3.76	5.66	6.72	8.16
R.P.M.	1985	1934	1883	1832	1750	1705	1644
Torque (LB-FT)	0	0.75	1.5	2.25	3.44	4.1	5

ABB Motors and Mechanical Inc.

WINDING # 34WG3946

0.75 HP DC 1750 RPM 180 V 3428P

ENCL: TEFC DUTY: CONT CL: F

Typical performance - not guaranteed values.

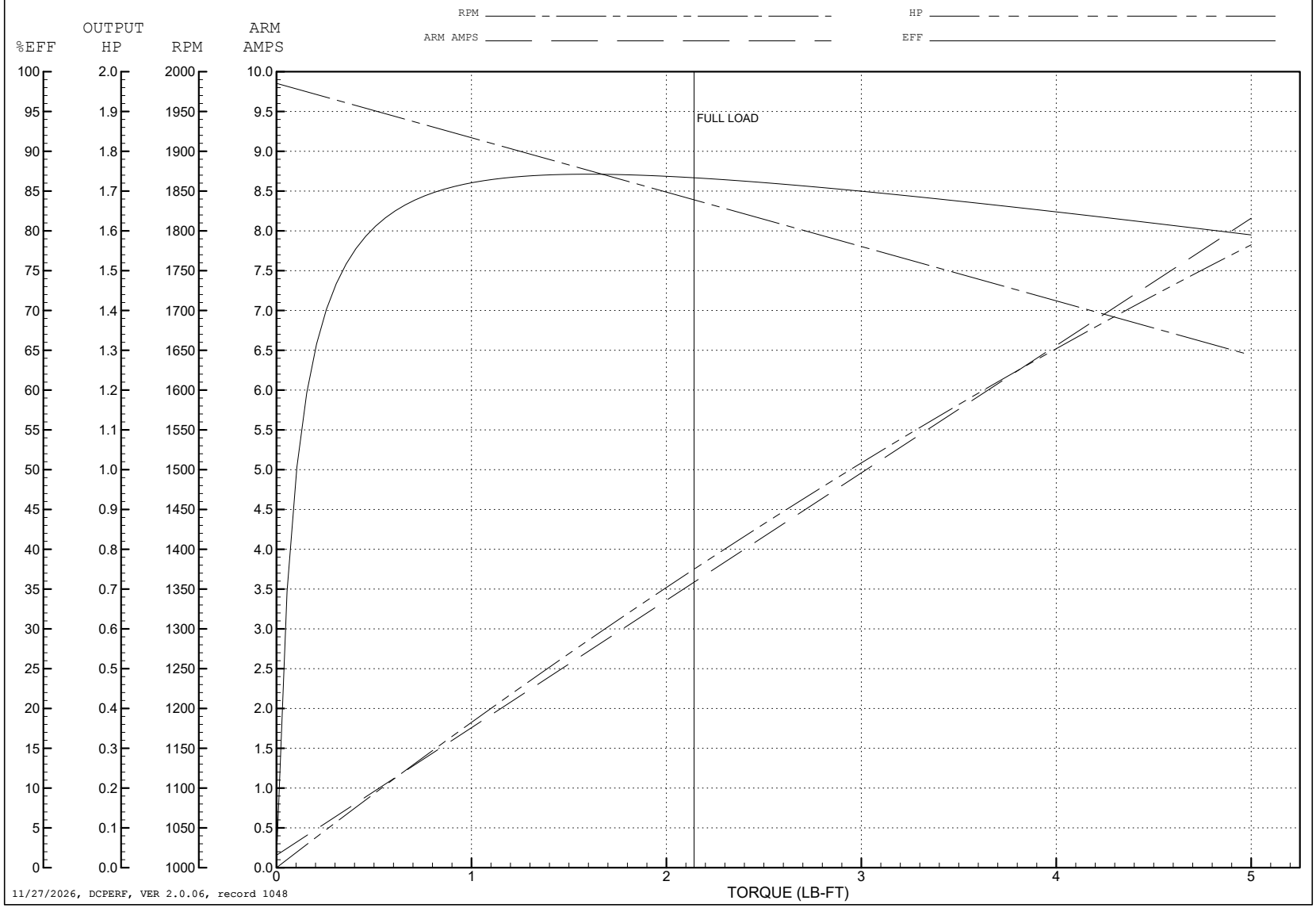

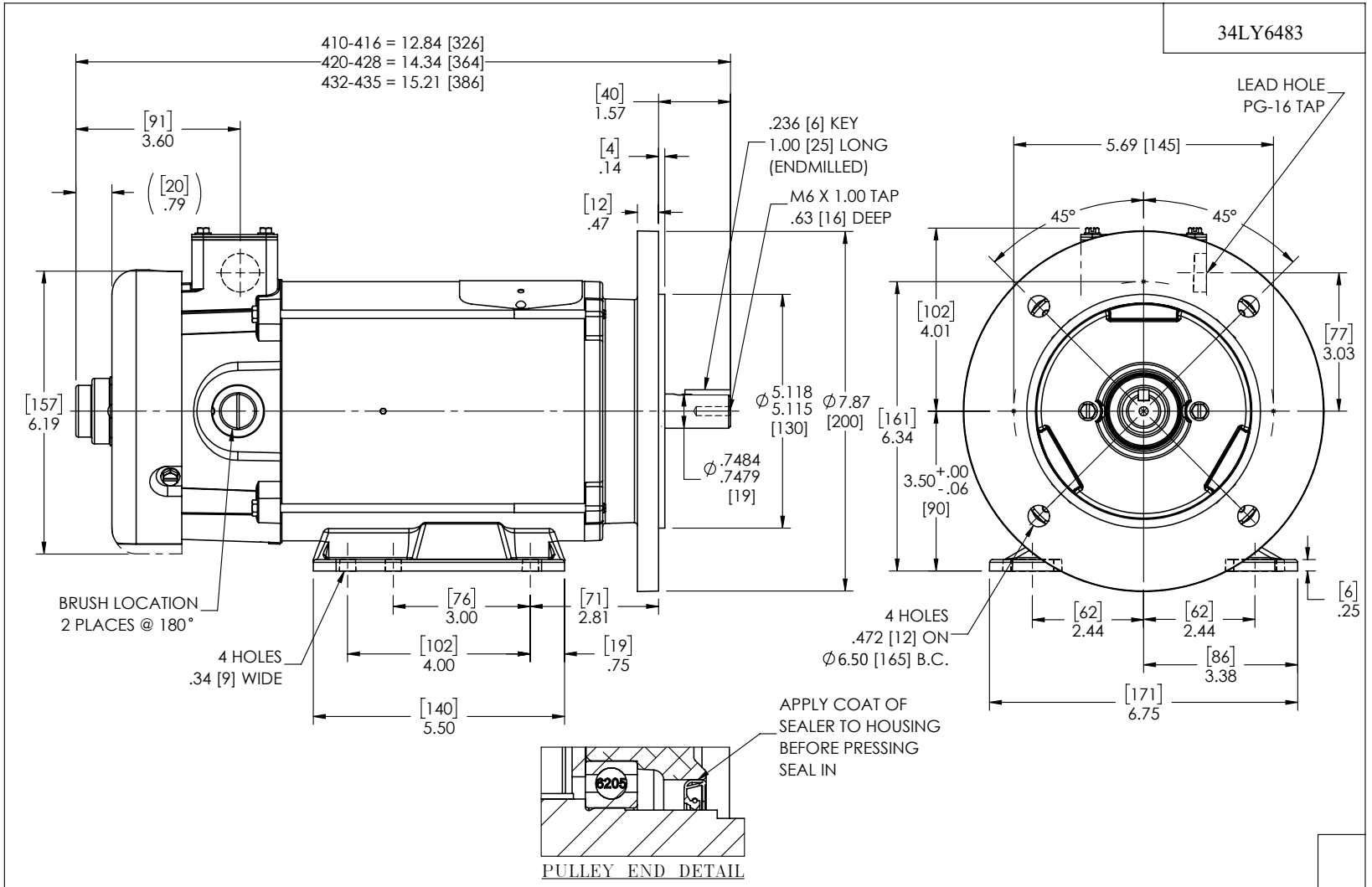
34LY6483
410-416 = 12.84 [326]
420-428 = 14.34 [364]
432-435 = 15.21 [386]
[91] 3.60
([20] .79)
[40] 1.57
[4] .14
[12] .47
.236 [6] KEY
1.00 [25] LONG
(ENDMILLED)
M6 X 1.00 TAP
.63 [16] DEEP
[157] 6.19
Ø5.118
5.115
[130]
Ø7.87
[200]
Ø.7484
.7479
[19]
BRUSH LOCATION
2 PLACES @ 180°
4 HOLES
.34 [9] WIDE
[76] 3.00
[71] 2.81
[102] 4.00
[19] .75
[140] 5.50
LEAD HOLE
PG-16 TAP
5.69 [145]
45°
45°
[102] 4.01
[77] 3.03
[161] 6.34
3.50 +.00 -.06
[90]
[6] .25
4 HOLES
.472 [12] ON
Ø6.50 [165] B.C.
[62] 2.44
[62] 2.44
[86] 3.38
[171] 6.75
APPLY COAT OF
SEALER TO HOUSING
BEFORE PRESSING
SEAL IN
6205
PULLEY END DETAIL
CUSTOMER IS RESPONSIBLE FOR DETERMINING THAT THE PRODUCT WILL PERFORM SUITABLY IN THE INTENDED APPLICATION
REV. DESC: LOAD TO SOLIDWORKS - REV A
REV: B
VERSION: 02
REVISED: 01:26:35 12/27/2022
TDR: 000001201165
BALDOR - RELIANCE®
34LY6483
MODEL NO. 34LY6483
REF: -
BY: ENFRAJ0
HOR 34PM TEFC IEC D80D, B5/B35 NEMA BASE & MTG/MFTK
34LY6483

CD0194

MOTOR

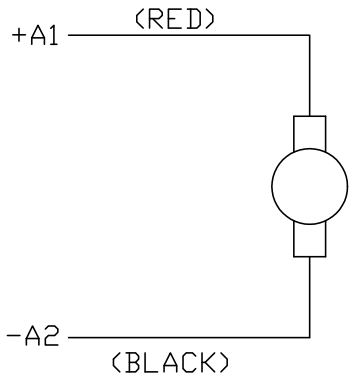

THERMOSTAT
(WHEN REQUIRED)

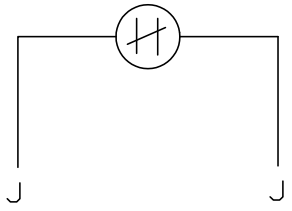

TACHOMETER

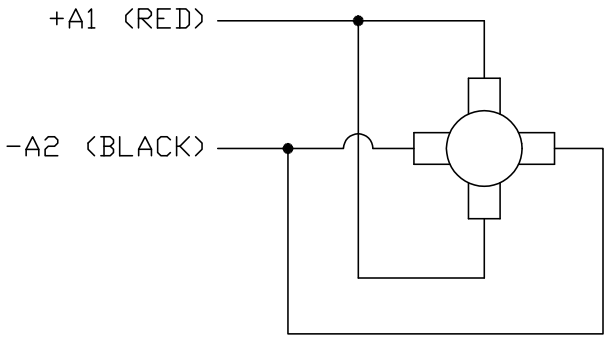

NOTES:

1. CCW ROTATION AS SHOWN FACING COMMUTATOR END. TO REVERSE MOTOR ROTATION OR TACHOMETER OUTPUT POLARITY INTERCHANGE LEADS A1(RED) & A2(BLACK)

2. LEAD COLORS FOR REFERENCE ONLY & NOT SPECIFIED BY THIS DRAWING. LEAD COLORS SPECIFIED BY LAYOUT DRAWING & BILL OF MATERIAL ONLY.

CD0194

MATL: –				BALDOR ELECTRIC Co.
REV: E	ADDED NOTE "LEAD COLORS FOR REFERENCE ONLY &....			
CD0194	SCALE: –	BY: CK	REVISED: 07/28/95	CD TYPE P DC PERMANENT MAGNET MOTORS AND TACHOMETERS
	FILE: AAA00004503		TDR: 0078737	