ABB BALDOR RELIANCE

Customer information packet

VP3411-14

.18/.25HP, 1750RPM, DC, D71C, 3410P, TEFC, F2
Class - None
Division -

Copyright © All product information within this document is subject to ABB Motors and Mechanical Inc. copyright © protection, unless otherwise noted.
11/27/2026 6:59:22 AM

Specifications

Armature Voltage	180 V
Base Speed	1750 rpm
Enclosure	TEFC
Frame	D71C
Frame Material	Steel
Haz Area Class and Group	None
Output Power	0.250 HP
Agency Approvals	CE
	CSA
	UR
Ambient Temperature	40 °C
Armature Current	1.4 a
Armature Inertia	3.902 lb-ft2
Base Indicator	Rigid
Bearing Grease Type	Polyrex EM (-20F +300F)
Drip Cover	No Drip Cover
Duty Rating	CONT
Feedback Device	NO FEEDBACK
Frame Prefix	D
Heater Indicator	No Heater
Lifting Lugs	No Lifting Lugs
Motor Lead Exit	Ko Box
Motor Lead Quantity/Wire Size	2 @ 14 AWG, A
Motor Lead Termination	Flying Leads
Motor Standards	IEC
Mounting Arrangement	B34
Overall Length	12.27 IN
Product Family	General Purpose
Pulley End Bearing Type	Sealed Bearing
Service Factor	1.00
Shaft Diameter	0.552 IN
Shaft Extension Location	Pulley End

Part Detail

Revision	AD
Type	DC
Mech. spec.	34-6242
Base	
Status	PRD/A
Elec. spec.	34WG4169
Layout	34LY6242
Eff. date	10-25-2024
CD Diagram	CD0194
Poles	00
Leads	2#14 A Y
Proprietary	False
Created date	01-01-0001

Shaft Ground Indicator	No Shaft Grounding
Shaft Rotation	Reversible
Shaft Slinger Indicator	No Slinger

Nameplate

NP1049L					
CAT.NO.	VP3411-14				
SPEC.	34-6242-4169				
KW/HP	.18/.25 TE		**I.P.**	54	
RPM	1750 TE				
IEC FRAME	D71C	**TYPE**	3410P		
ARM V	180		**ARM A**	1.4	
FLD V			**FLD A**		
INSUL	F	**AMB.**	40		
DUTY	CONT		**SUPPLY**	1.5	
BRG/DE	6203	**BRG/ODE**	6203		
BRUSHES	2/BP5000AW14				
			BLANK		
SER.					
BLANK					
APRV-CE		**APRV-CSA**		**APRV-UL**	

Accessories

Part number	Description	Multiplier
TK3400	TACHO MOUNTING KIT FOR TK3400	A8
TK3400-HPU	HPU10 MOUNTING KIT 34P/35P TEFC	

DC Motor Performance Data
Record # 431
Typical performance - not guaranteed values

Winding: 34WG4169-R001	**Type:** 3410P	**Enclosure:** TEFC

Nameplate Data	
Rated Output (KW)	0.19
R.P.M.	1750
Armature Volts	180
Armature Amps	1.4
Field Volts	
Field Amps	
Rating - Duty	40C AMB-CONT
Form Factor	1.5

General Characteristics

Load Characteristics at 180 Armature Volts

Load Point	**1**	**2**	**3**	**4**	**5**	**6**	**7**
Armature Amps	0.128	0.388	0.648	0.908	1.168	1.428	1.688
R.P.M.	1744	1712	1681	1649	1617	1586	1554
Torque (LB-FT)	0	0.1875	0.375	0.5625	0.75	0.9375	1.125

ABB Motors and Mechanical Inc.

WINDING # 34WG4169

0.19 KW DC 1750 RPM 180 V 3410P

ENCL: TEFC DUTY: CONT CL: F

Typical performance - not guaranteed values.

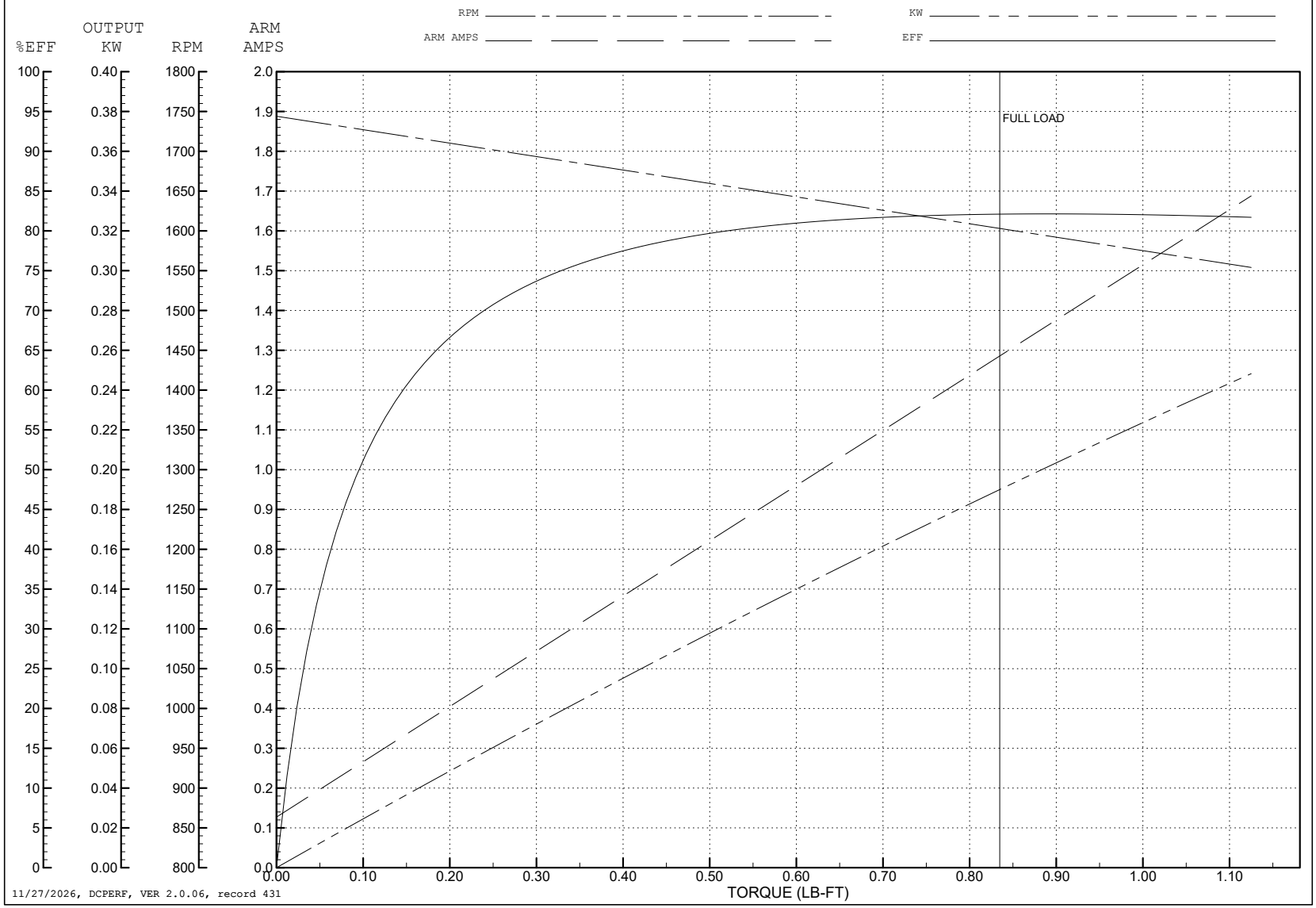

34LY6242

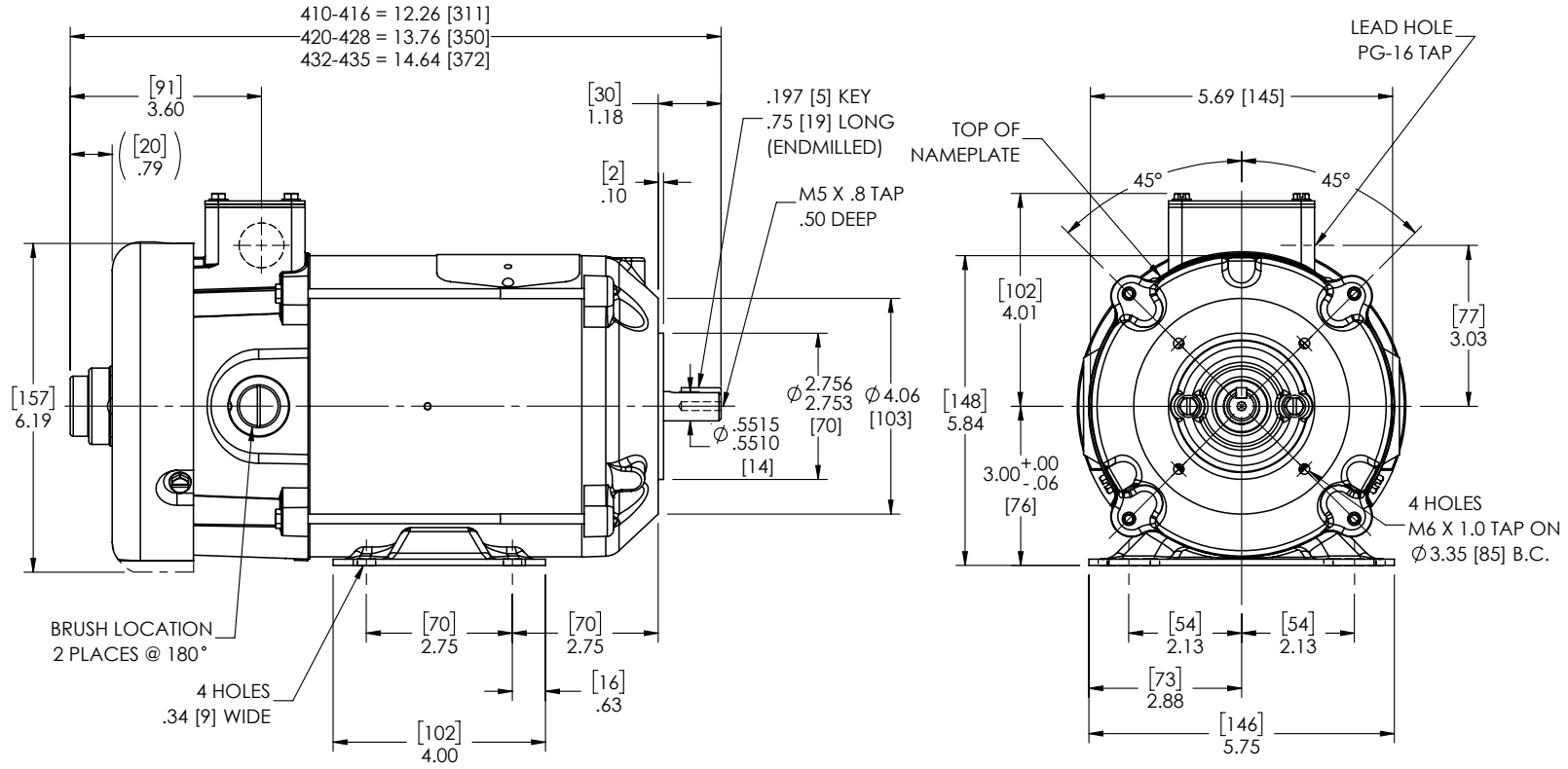

34LY6242

CUSTOMER IS RESPONSIBLE FOR DETERMINING THAT THE PRODUCT WILL PERFORM SUITABLY IN THE INTENDED APPLICATION

REV. DESC: LOAD TO SOLIDWORKS - REV N			
REV: P	VERSION: 02	REVISED: 11:41:34 12/22/2022	TDR: 000001201165
34LY6242	MODEL NO. 34LY6242		REF: -
	BY: ENFRAJ0		

BALDOR - RELIANCE®

STD HORZ MODEL 34 PM TEFC IEC D71C-B14 2 POLE W/M.F.T.K.

34LY6242

CD0194

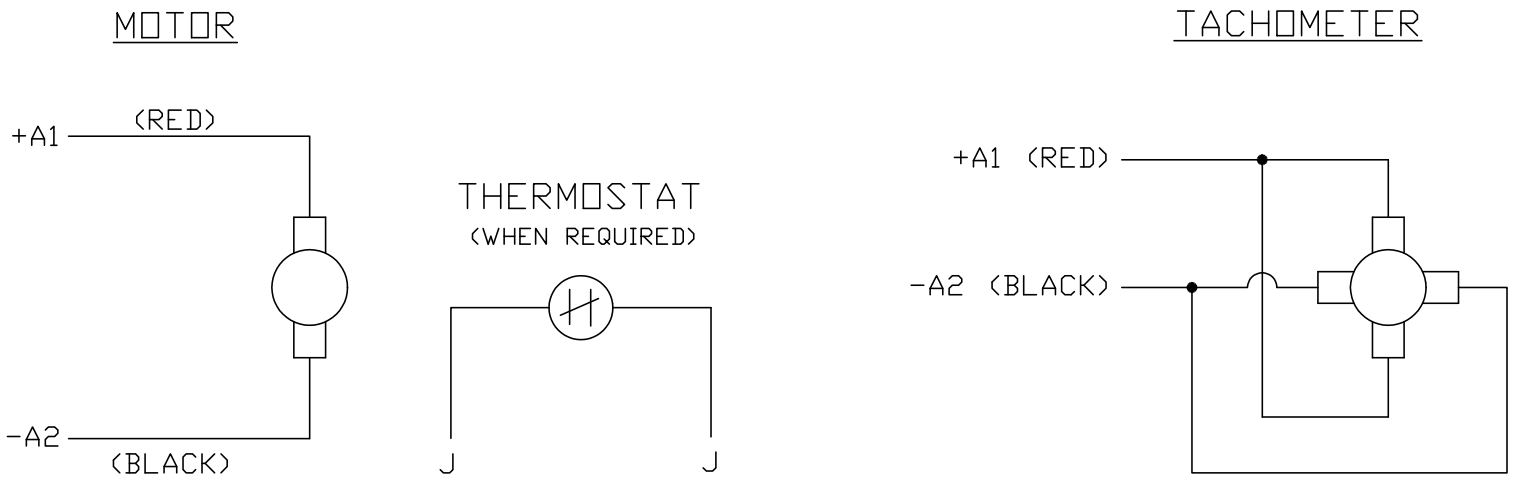

NOTES:

1. CCW ROTATION AS SHOWN FACING COMMUTATOR END. TO REVERSE MOTOR ROTATION OR TACHOMETER OUTPUT POLARITY INTERCHANGE LEADS A1(RED) & A2(BLACK)

2. LEAD COLORS FOR REFERENCE ONLY & NOT SPECIFIED BY THIS DRAWING. LEAD COLORS SPECIFIED BY LAYOUT DRAWING & BILL OF MATERIAL ONLY.

CD0194

MATL: –				BALDOR ELECTRIC Co.
REV: E	ADDED NOTE "LEAD COLORS FOR REFERENCE ONLY &....			
CD0194	SCALE: –	BY: CK	REVISED: 07/28/95	CD TYPE P DC PERMANENT MAGNET MOTORS AND TACHOMETERS
	FILE: AAA00004503		TDR: 0078737	