ABB BALDOR RELIANCE

Customer information packet

VM3537-5

.5HP, 3450RPM, 3PH, 60HZ, 56C, 3410M, TEFC, F1
Class - None
Division - Not Applicable

Copyright © All product information within this document is subject to ABB Motors and Mechanical Inc. copyright © protection, unless otherwise noted.
11/28/2026 5:54:53 PM

Specifications

Enclosure	TEFC
Frame	56C
Frame Material	Steel
Frequency	60.00 Hz
Haz Area Class and Group	None
Haz Area Division	Not Applicable
Motor Letter Type	Three Phase
Output @ Frequency	.500 HP @ 60 HZ
Phase	3
Synchronous Speed @ Frequency	3600 RPM @ 60 HZ
Voltage @ Frequency	575.0 V @ 60 HZ
Agency Approvals	C UR US
Ambient Temperature	40 °C
Auxiliary Box	NO AUXILLARY BOX
Auxiliary Box Lead Termination	None
Base Indicator	No Mounting
Bearing Grease Type	Polyrex EM (-20F +300F)
Blower	None
Current @ Voltage	.800 A @ 575.0 V
Design Code	B
Drip Cover	No Drip Cover
Duty Rating	CONT
Efficiency @ 100% Load	68.0 %
Electrically Isolated Bearing	Not Electrically Isolated
Feedback Device	NO FEEDBACK
Front Face Code	Standard
Front Shaft Indicator	None
Heater Indicator	No Heater
High Voltage Full Load Amps	0.8 a
Insulation Class	B
Inverter Code	Not Inverter
KVA Code	J

Part Detail

Revision	Z
Type	AC
Mech. spec.	34A063
Base	
Status	PRD/A
Elec. spec.	34WG0487
Layout	34LYA063
Eff. date	02-10-2025
CD Diagram	CD0006
Poles	02
Leads	3#18
Proprietary	False
Created date	01-01-0001

Lifting Lugs	No Lifting Lugs
Locked Bearing Indicator	Locked Bearing
Motor Lead Exit	Ko Box
Motor Lead Quantity/Wire Size	3 @ 18 AWG
Motor Lead Termination	Flying Leads
Motor Standards	NEMA
Motor Type	3410M
Mounting Arrangement	F1
Number of Poles	2
Overall Length	11.35 IN
Power Factor	63
Product Family	General Purpose
Pulley End Bearing Type	Ball
Pulley Face Code	C-Face
Pulley Shaft Indicator	Standard
Rodent Screen	None
RoHS Status	ROHS COMPLIANT
Service Factor	1.25
Shaft Diameter	0.625 IN
Shaft Extension Location	Pulley End
Shaft Ground Indicator	No Shaft Grounding
Shaft Rotation	Reversible
Shaft Slinger Indicator	No Slinger
Speed	3450 rpm
Speed Code	Single Speed
Starting Method	Direct on line
Thermal Device - Bearing	None
Thermal Device - Winding	None
Vibration Sensor Indicator	No Vibration Sensor
Winding Thermal 1	None
Winding Thermal 2	None

Nameplate

	NP1256L							
CAT.NO.	VM3537-5							
SPEC.	34A63-487							
HP	.5							
VOLTS	575							
AMP	.8							
RPM	3450							
FRAME	56C	**HZ**	60			**PH**	3	
SER.F.	1.25	**CODE**	J	**DES**	B	**CLASS**	B	
NEMA-NOM-EFF	68	**PF**	63					
RATING	40C AMB-CONT							
CC								
DE	6203	**ODE**	6203					
ENCL	TEFC	**SN**						
	SFA 1							

AC Induction Motor Performance Data
Record # 6584
Typical performance - not guaranteed values

Winding: 34WG0487-R001	**Type:** 3410M	**Enclosure:** TEFC

Nameplate Data				**575 V, 60 Hz: Single Voltage Motor**	
Rated Output (HP)			.5	**Full Load Torque**	0.75 LB-FT
Volts			575	**Start Configuration**	direct on line
Full Load Amps			.8	**Breakdown Torque**	3.4 LB-FT
R.P.M.			3450	**Pull-up Torque**	2.7 LB-FT
Hz	60	**Phase**	3	**Locked-rotor Torque**	3 LB-FT
NEMA Design Code	B	**KVA Code**	J	**Starting Current**	4.8 A
Service Factor (S.F.)			1.25	**No-load Current**	0.72 A
NEMA Nom. Eff.	68	**Power Factor**	63	**Line-line Res. @ 25ºC**	56.4 Ω
Rating - Duty			40C AMB-CONT	**Temp. Rise @ Rated Load**	58°C
S.F. Amps			1	**Temp. Rise @ S.F. Load**	69°C

Load Characteristics 575 V, 60 Hz, 0.5 HP

% of Rated Load	**25**	**50**	**75**	**100**	**125**	**150**	**S.F.**
Power Factor	33	44	56	64	70	77	70
Efficiency	41.4	56.3	64	67.2	68.4	68.5	68.4
Speed	3563	3535	3501	3466	3432	3381	3432
Line amperes	0.73	0.78	0.81	0.88	0.96	1.06	0.96

ABB Motors and Mechanical Inc.

WINDING # 34WG0487

0.5 HP 3 PH 60 HZ 3450 RPM 575 V 3410M

Typical performance - not guaranteed values.

TORQUES(LB-FT): PO=3.4 PU=2.7 LR=3 LRA=4.8

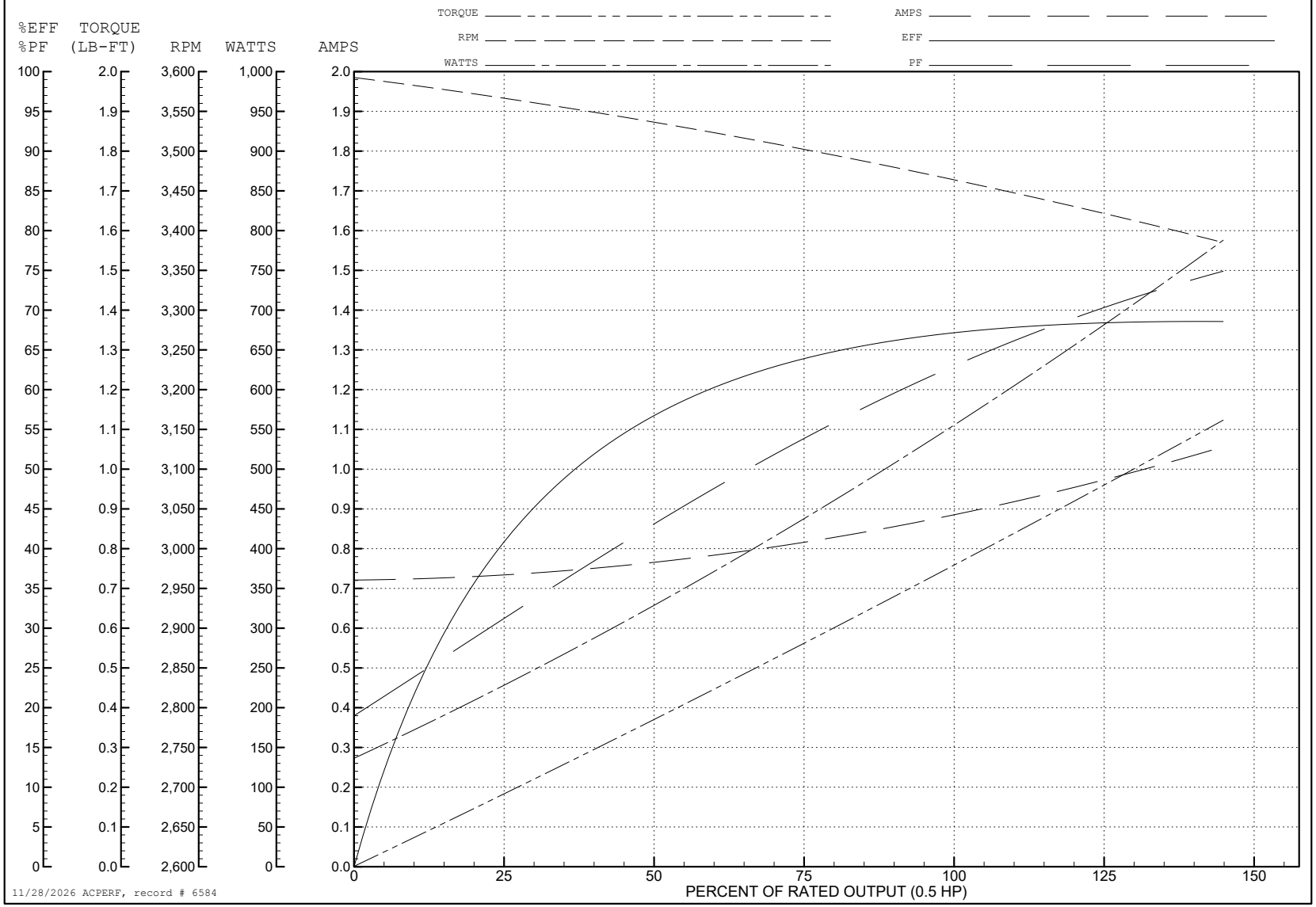

34LYA063

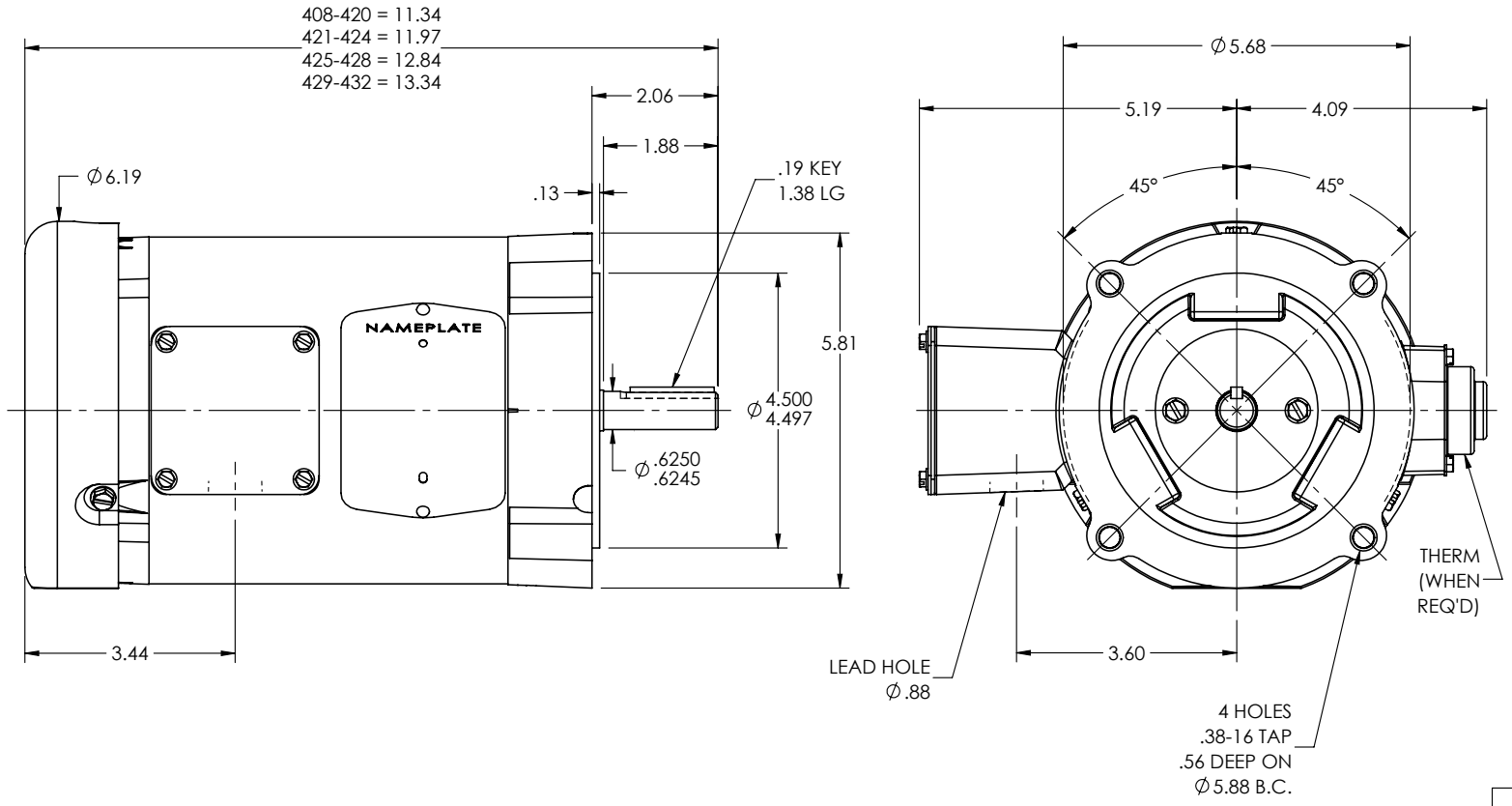

CUSTOMER IS RESPONSIBLE FOR DETERMINING THAT THE PRODUCT WILL PERFORM SUITABLY IN THE INTENDED APPLICATION

REV. DESC: CLEAN UP DIMENSIONING			
REV: P	VERSION: 05	REVISED: 08:51:08 10/31/2024	TDR: 000001243684
34LYA063	MODEL NO. 34LYA063		REF: -
	BY: ENJEFD0		

BALDOR - RELIANCE®

STD VERT 34M NEMA 56C TEFC

34LYA063

CD0006

TYPICAL WYE–CONNECTED MOTOR

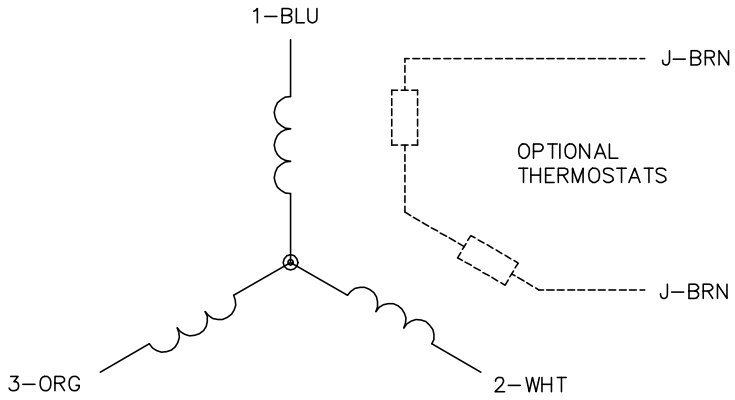

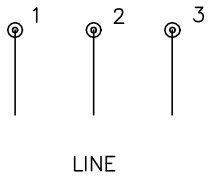

TYPICAL DELTA–CONNECTED MOTOR

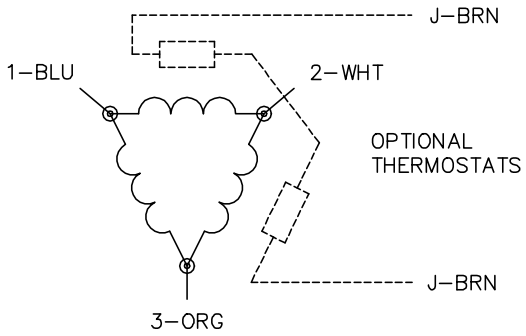

NOTES:

1. THREE LEAD MOTOR MAY BE EITHER WYE CONNECTED OR DELTA CONNECTED.
2. INTERCHANGE ANY TWO LINE LEADS TO REVERSE ROTATION.
3. OPTIONAL THERMOSTATS ARE PROVIDED WHEN SPECIFIED.
4. ACTUAL NUMBER OF INTERNAL PARALLEL CIRCUITS MAY VARY.
5. LEAD COLORS ARE OPTIONAL. LEADS MUST BE NUMBERED AS SHOWN.

CD0006

REV. DESC: ADD CLASS CONN00000007		
REV. LTR: E	VERSION: 01	TDR: 000001099922
FILE: \AAA\00005\141	REVISED: 10:24:49 02/19/2019	BY: ENBRIR0
MTL: –		

BALDOR - RELIANCE®

3PH, SV, 3 LEADS, WYE OR DELTA CONNECTED

SH 1 of 1