34LYH852

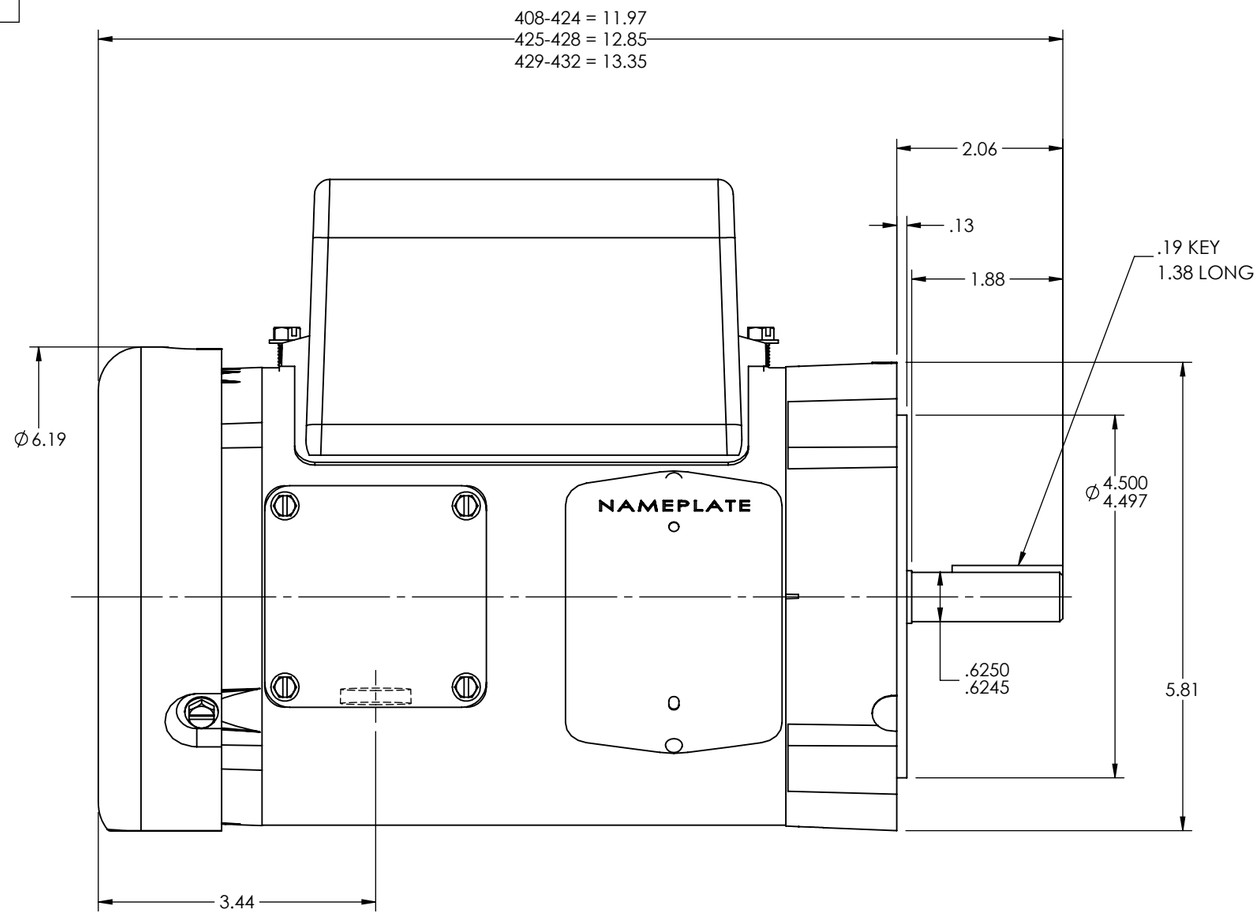

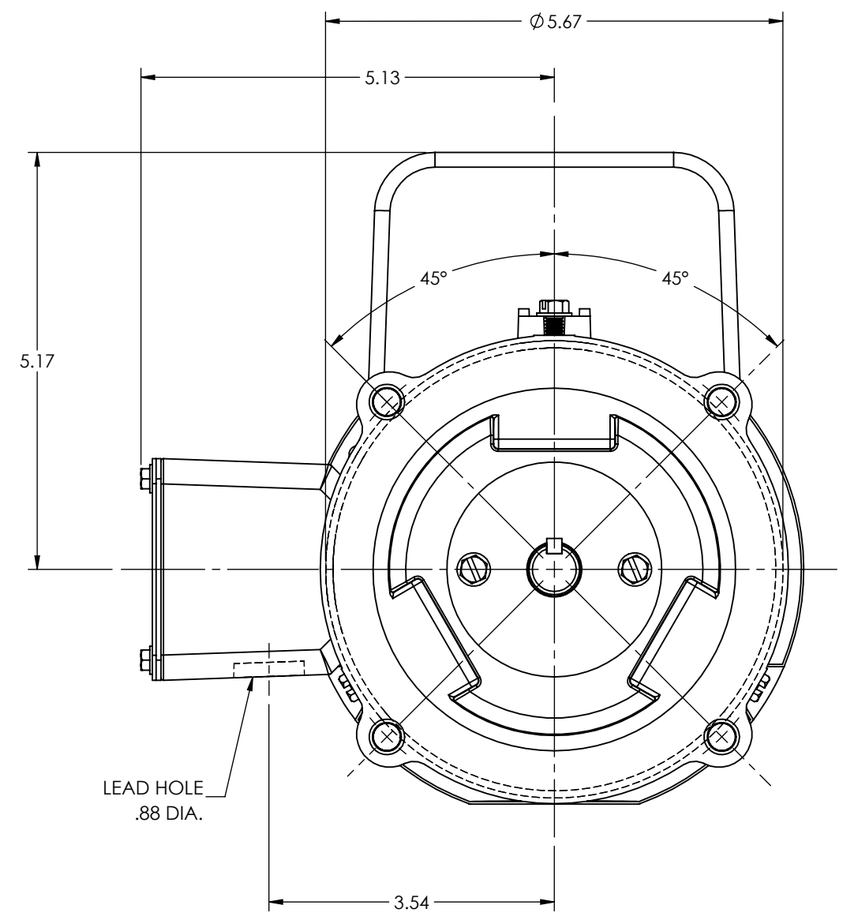

CUSTOMER IS RESPONSIBLE FOR DETERMINING THAT THE PRODUCT WILL PERFORM SUITABLY IN THE INTENDED APPLICATION

REV. DESC: CONVERT AUTOCAD TO SWD DRAWING			
REV: B	VERSION: 02	REVISED: 08:29:14 05/10/2024	TDR: 000001231935
MODEL NO. 34LYH852			REF: -
BY: USALMAZ			B

BALDOR - RELIANCE®

STD VERT 34LC NEMA 56C TEFC

34LYH852