42LYE338

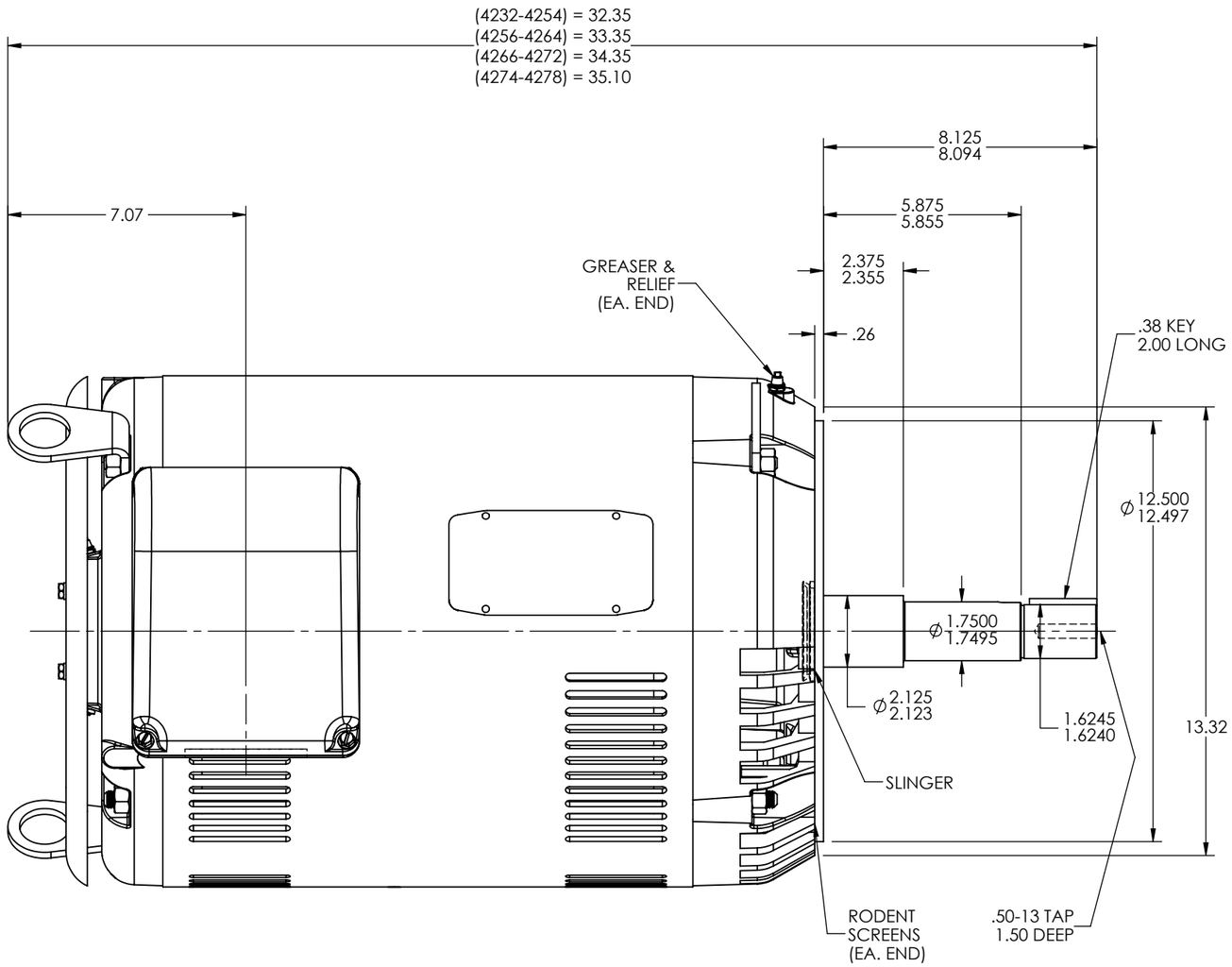

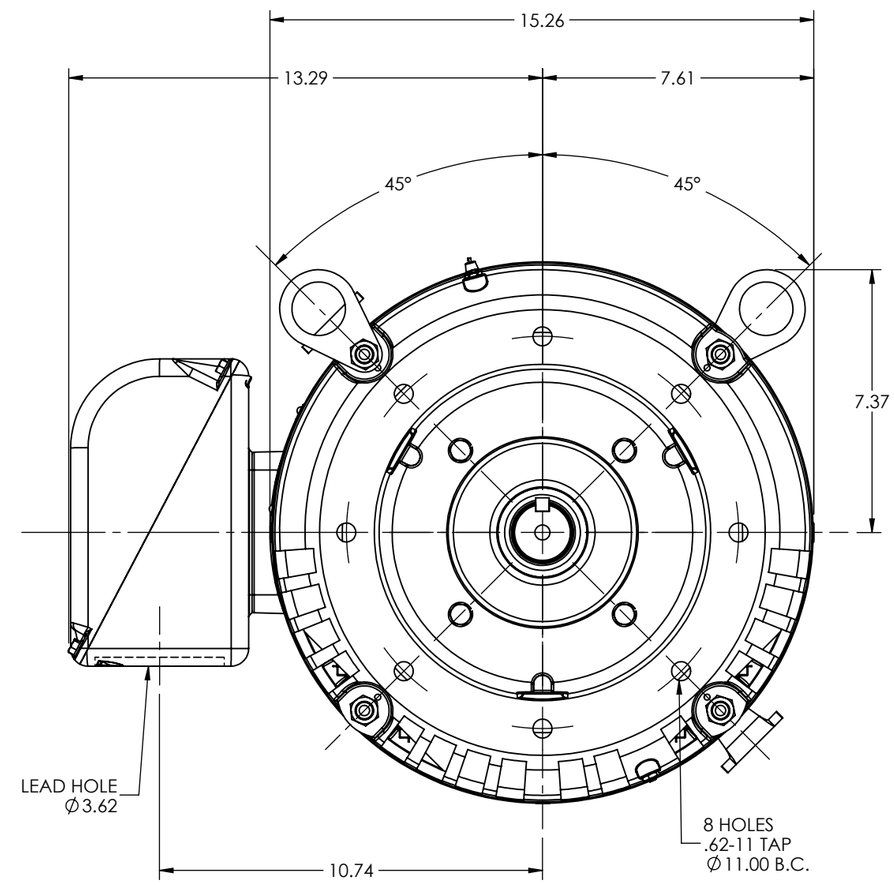

42LYE338

CUSTOMER IS RESPONSIBLE FOR DETERMINING THAT BALDOR'S PRODUCT WILL PERFORM SUITABLY IN THE INTENDED APPLICATION

REV. DESC: CONVERT DRW FROM AUTOCAD TO SWD			
REV: A	VERSION: 01	REVISED: 10:39:27 11/10/2023	TDR: 000001220227
MODEL NO. 42LYE338			REF: -
BY: USALMAZ			B

BALDOR

VERT OPSB 364-5JP W/DRIP CVR,VER LIFT,ROD.SCRS,3.62 LEAD HL

42LYE338