37LYN805

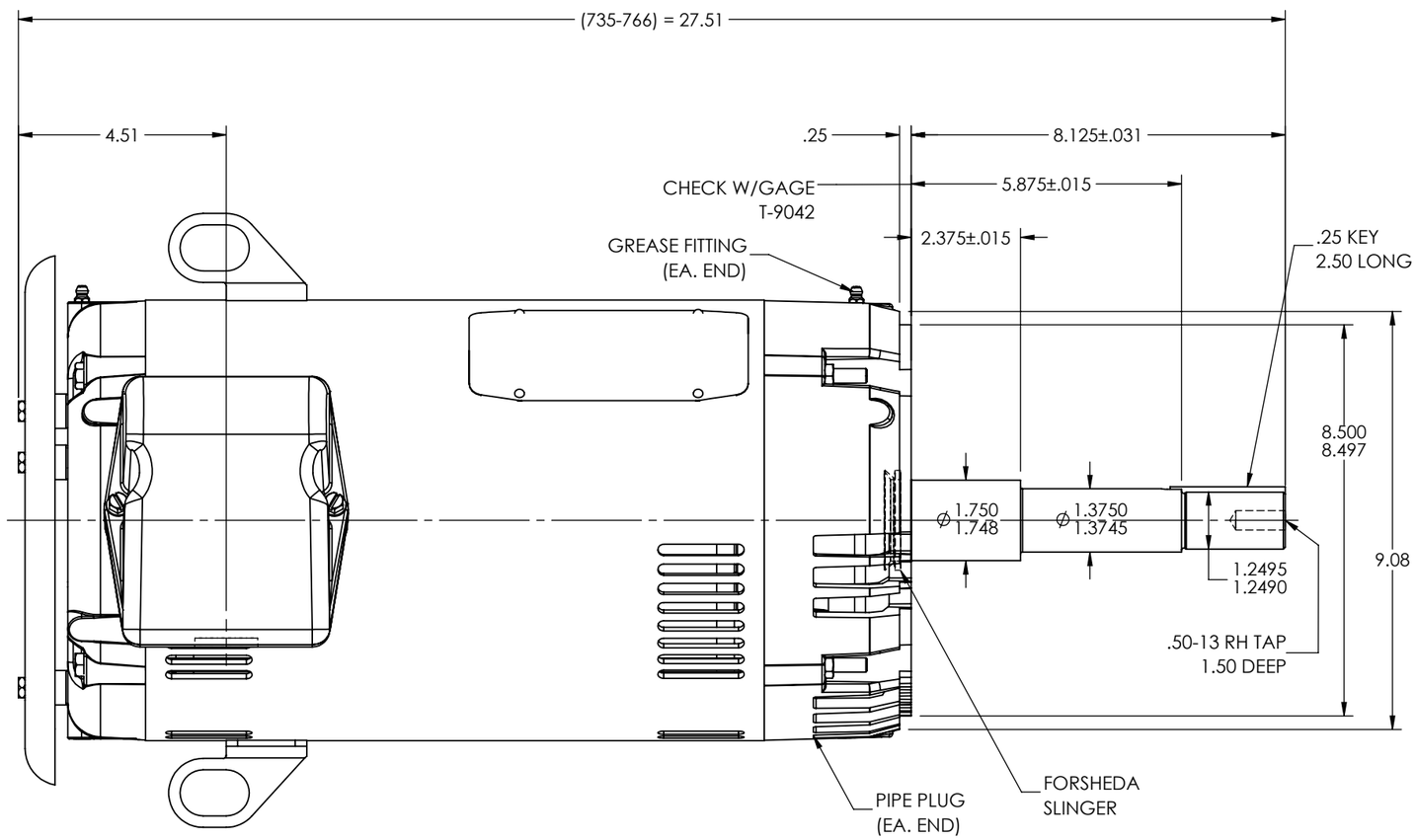

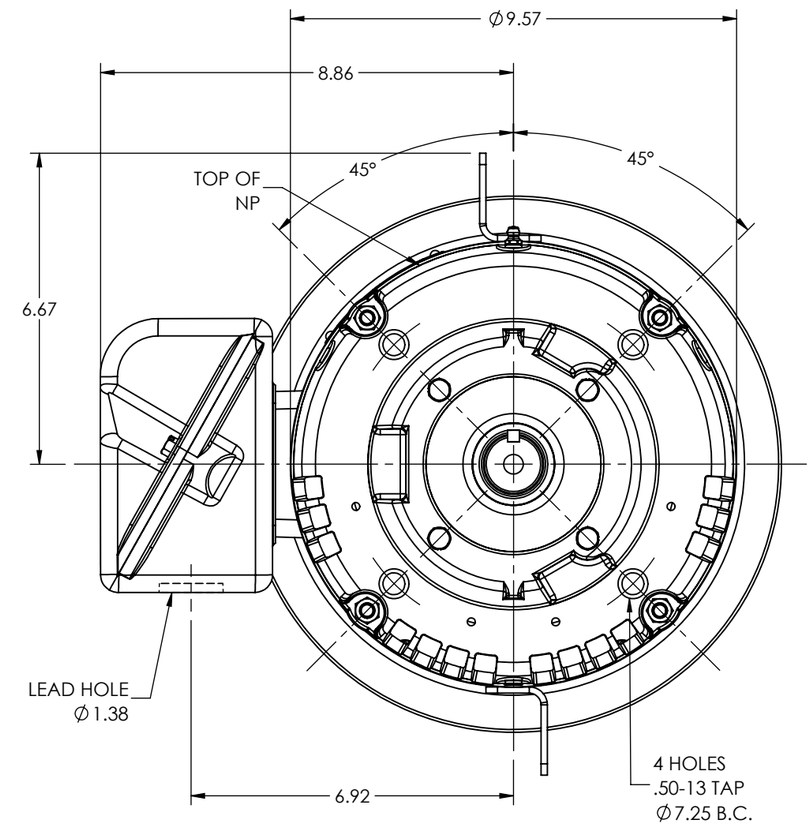

37LYN805

CUSTOMER IS RESPONSIBLE FOR DETERMINING THAT THE PRODUCT WILL PERFORM SUITABLY IN THE INTENDED APPLICATION

REV. DESC: CONVERT AUTOCAD DRW TO SWD DRW			
REV: C	VERSION: 03	REVISED: 02:28:05 10/27/2022	TDR: 000001198704
MODEL NO. 37LYN805			REF: -
BY: ENALEM0			B

BALDOR - RELIANCE®

VER 254-6JP OPSB M W/09 KOBX, DRIP CVR, VER LIFT, FIRE PUMP

37LYN805