ABB BALDOR RELIANCE

Customer information packet

VFSWDM3710T-E

7.5HP, 1770RPM, 3PH, 60HZ, 213TC, 3740M, TEFC
Class - None
Division - Not Applicable

Copyright © All product information within this document is subject to ABB Motors and Mechanical Inc. copyright © protection, unless otherwise noted.
11/23/2026 3:19:00 AM

Specifications

Enclosure	TEFC
Frame	213TC
Frame Material	Stainless Steel
Frequency	60.00 Hz
Haz Area Class and Group	None
Haz Area Division	Not Applicable
Motor Letter Type	Three Phase
Output @ Frequency	7.500 HP @ 60 HZ
Phase	3
Synchronous Speed @ Frequency	1800 RPM @ 60 HZ
Voltage @ Frequency	460.0 V @ 60 HZ
	230.0 V @ 60 HZ
Agency Approvals	CSA
	CSA EEV
	NEMA PREMIUM
	UR
Ambient Temperature	40 °C
Auxiliary Box	NO AUXILLARY BOX
Auxiliary Box Lead Termination	None
Base Indicator	No Mounting
Bearing Grease Type	Polyrex EM (-20F +300F)
Blower	None
Current @ Voltage	19.000 A @ 230.0 V
	9.500 A @ 460.0 V
Design Code	A
Drip Cover	No Drip Cover
Duty Rating	CONT
Efficiency @ 100% Load	91.7 %
Electrically Isolated Bearing	Not Electrically Isolated
Feedback Device	NO FEEDBACK
Front Face Code	Standard
Front Shaft Indicator	None

Part Detail

Revision	P
Type	AC
Mech. spec.	37Q227
Base	
Status	PRD/A
Elec. spec.	37WGS250
Layout	37LYQ227
Eff. date	02-11-2026
CD Diagram	CD0005
Poles	04
Leads	9#14
Proprietary	False
Created date	07-10-2017

Heater Indicator	No Heater
High Voltage Full Load Amps	9.5 a
Insulation Class	H
Inverter Code	Inverter Ready
KVA Code	J
Lifting Lugs	Standard Lifting Lugs
Locked Bearing Indicator	Locked Bearing
Motor Lead Exit	Ko Box
Motor Lead Quantity/Wire Size	9 @ 14 AWG
Motor Lead Termination	Flying Leads
Motor Standards	NEMA
Motor Type	3740M
Mounting Arrangement	F1
Number of Poles	4
Overall Length	20.68 IN
Power Factor	81
Product Family	WD All SS Encapsulated
Pulley End Bearing Type	Sealed Bearing
Pulley Face Code	C-Face
Pulley Shaft Indicator	Standard
Rodent Screen	None
RoHS Status	ROHS COMPLIANT
Service Factor	1.15
Shaft Diameter	1.375 IN
Shaft Extension Location	Pulley End
Shaft Ground Indicator	No Shaft Grounding
Shaft Rotation	Reversible
Shaft Slinger Indicator	No Slinger
Speed	1770 rpm
Speed Code	Single Speed
Starting Method	Direct on line
Thermal Device - Bearing	None
Thermal Device - Winding	None
Vibration Sensor Indicator	No Vibration Sensor

Winding Thermal 1	None
Winding Thermal 2	None

Nameplate

NP4427AAA01												
CAT #	VFSWDM3710T-E			**WT**	136	**LBS**						
SPEC	37Q227S250G1			**ENCL**	TEFC							
SER #				**CC**	010A	**IP**	69					
HP	7.5			**MAG CUR**	8.8/4.4							
VOLTS	230/460					**NEMA NOM. EFF**	91.7					
AMPS	19/9.5					**PF**	81					
RATING	40C AMB-CONT											
RPM	1770				**MAX RPM**	2700						
FRAME	213TC	**HZ**	60	**CODE**	J	**CLASS**	H					
SER.F.	1.15	**SF AMP**	22/11			**PH**	3	**DES**	A			
DE	6307			**ODE**	6307							
LUBRICATION	POLYREX EM											
ID LOGO		**INVERTER TYPE**		**VPWM**		**CHP**	60	**TO**	90	1.5:1		
ID LOGO	**WK2**	0.98	**CT**	15	**TO**	60		4:1				
ID LOGO	**SL HZ**	1	**VT**	6	**TO**	60		10:1				
						QR						
YR												

AC Induction Motor Performance Data
Record # 23247
Typical performance - not guaranteed values

Winding: 37WGS250-R001	**Type:** 3740M	**Enclosure:** TEFC

Nameplate Data				**460 V, 60 Hz: High Voltage Connection**	
Rated Output (HP)			7.5	**Full Load Torque**	22.25 LB-FT
Volts			230/460	**Start Configuration**	direct on line
Full Load Amps			19/9.5	**Breakdown Torque**	73.15 LB-FT
R.P.M.			1770	**Pull-up Torque**	39.78 LB-FT
Hz	60	**Phase**	3	**Locked-rotor Torque**	47.8 LB-FT
NEMA Design Code	A	**KVA Code**	J	**Starting Current**	74.95 A
Service Factor (S.F.)			1.15	**No-load Current**	4.39 A
NEMA Nom. Eff.	91.7	**Power Factor**	81	**Line-line Res. @ 25ºC**	1.33 Ω
Rating - Duty			40C AMB-CONT	**Temp. Rise @ Rated Load**	69°C
S.F. Amps				**Temp. Rise @ S.F. Load**	84°C
				Locked-rotor Power Factor	37
				Rotor inertia	0.984 LB-FT2

Load Characteristics 460 V, 60 Hz, 7.5 HP

% of Rated Load	**25**	**50**	**75**	**100**	**125**	**150**	**S.F.**
Power Factor	42	64	75	81	83	85	82
Efficiency	86.5	90.9	92	91.7	90.8	89.7	91.4
Speed	1793	1786	1779	1771	1761	1751	1764
Line amperes	4.89	6.02	7.67	9.49	11.62	13.88	10.7

ABB Motors and Mechanical Inc.

WINDING # 37WGS250

7.5 HP 3 PH 60 HZ 1770 RPM 460 V 3740M

Typical performance - not guaranteed values.

TORQUES(LB-FT): PO=73.15 PU=39.78 LR=47.8 LRA=74.95

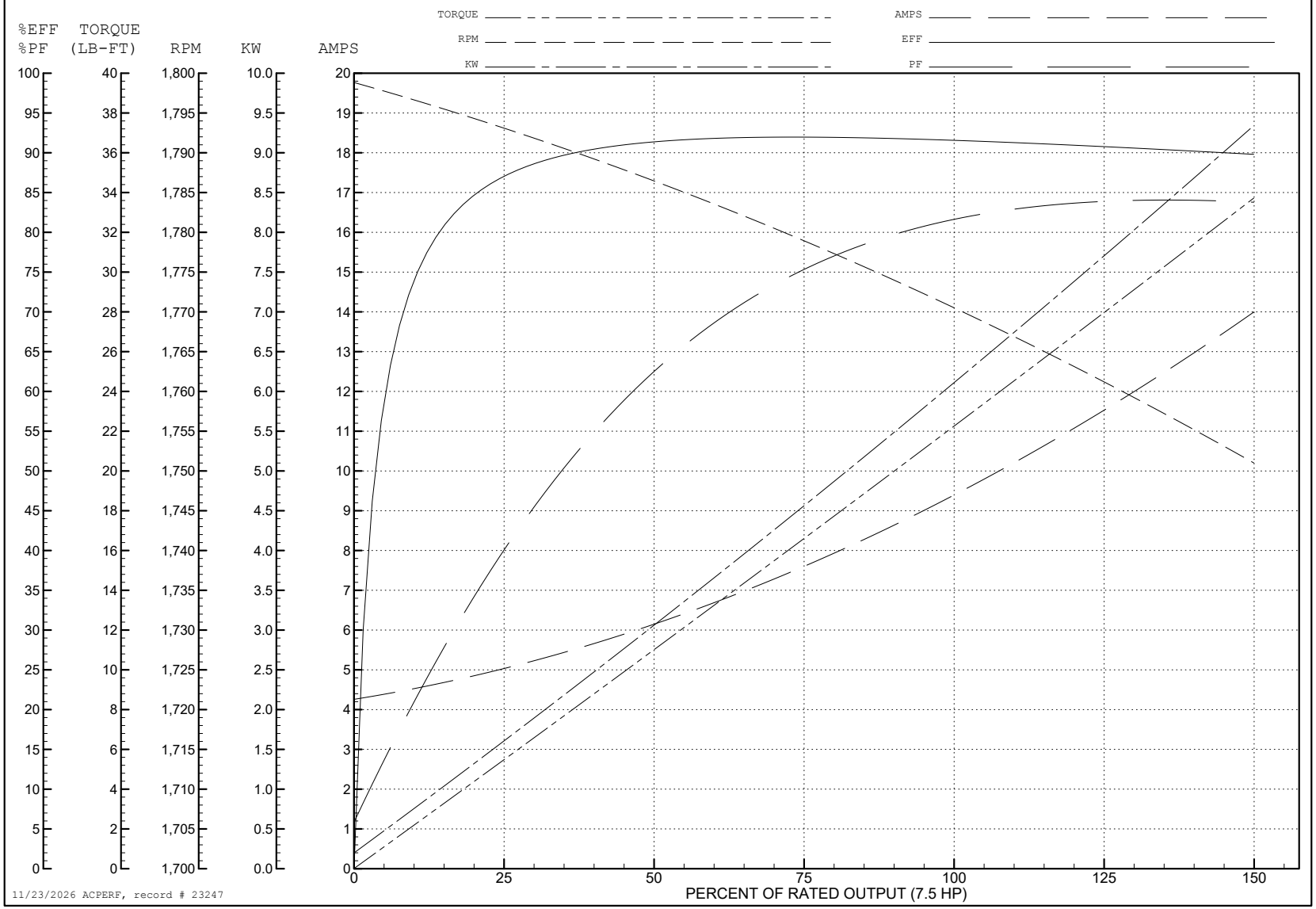

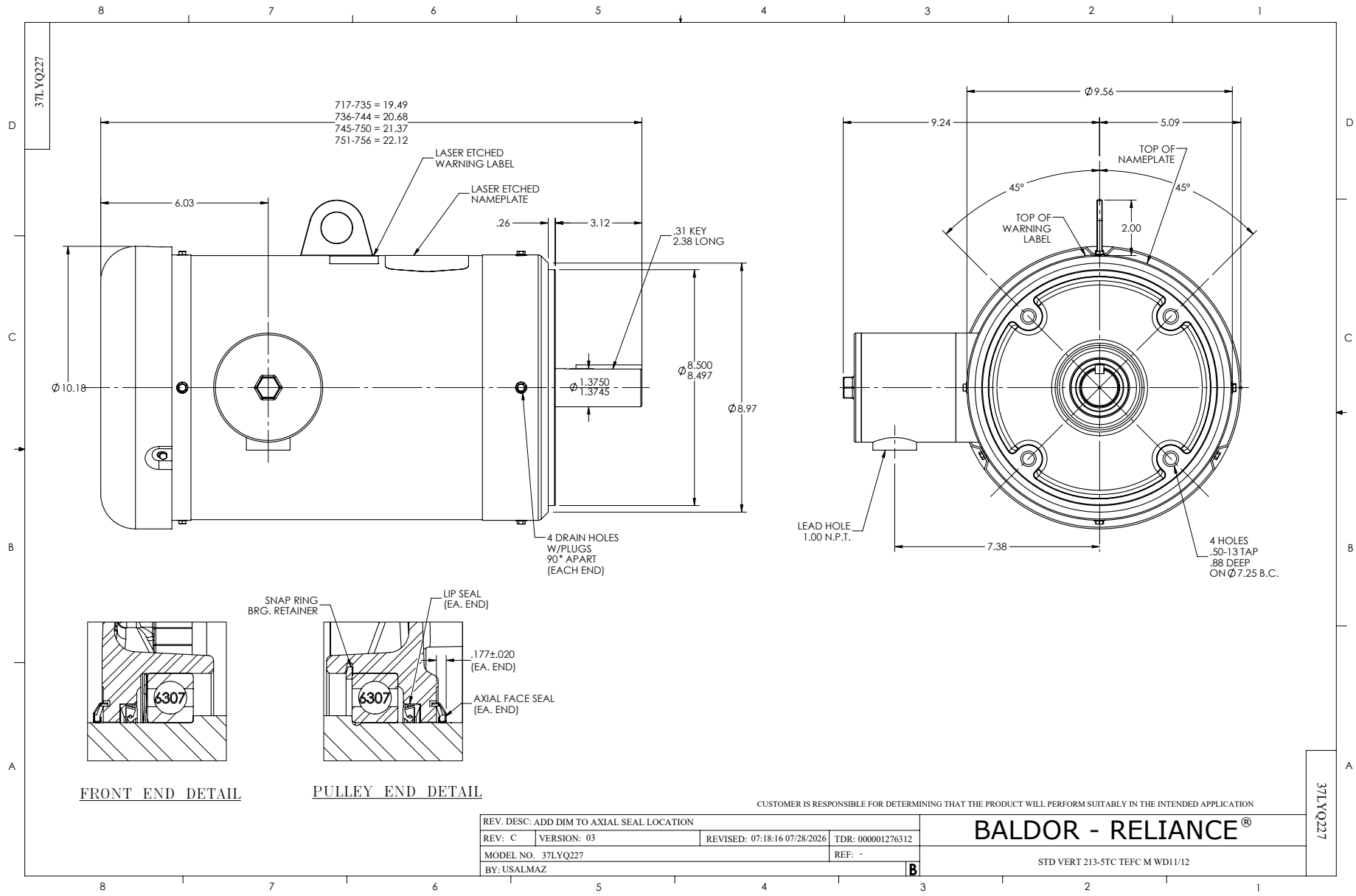
37LYQ227
717-735 = 19.49
736-744 = 20.68
745-750 = 21.37
751-756 = 22.12
LASER ETCHED WARNING LABEL
LASER ETCHED NAMEPLATE
6.03
.26
3.12
.31 KEY 2.38 LONG
Ø10.18
Ø1.3750 1.3745
Ø8.500 8.497
Ø8.97
4 DRAIN HOLES W/PLUGS 90° APART (EACH END)
Ø9.56
9.24
5.09
TOP OF NAMEPLATE
45°
45°
TOP OF WARNING LABEL
2.00
LEAD HOLE 1.00 N.P.T.
7.38
4 HOLES .50-13 TAP .88 DEEP ON Ø7.25 B.C.
SNAP RING BRG. RETAINER
LIP SEAL (EA. END)
.177±.020 (EA. END)
AXIAL FACE SEAL (EA. END)
6307
6307
FRONT END DETAIL
PULLEY END DETAIL
CUSTOMER IS RESPONSIBLE FOR DETERMINING THAT THE PRODUCT WILL PERFORM SUITABLY IN THE INTENDED APPLICATION
REV. DESC: ADD DIM TO AXIAL SEAL LOCATION
REV: C
VERSION: 03
REVISED: 07:18:16 07/28/2026
TDR: 000001276312
MODEL NO. 37LYQ227
REF: -
BY: USALMAZ
B
BALDOR - RELIANCE®
STD VERT 213-5TC TEFC M WD11/12
37LYQ227

CD0005

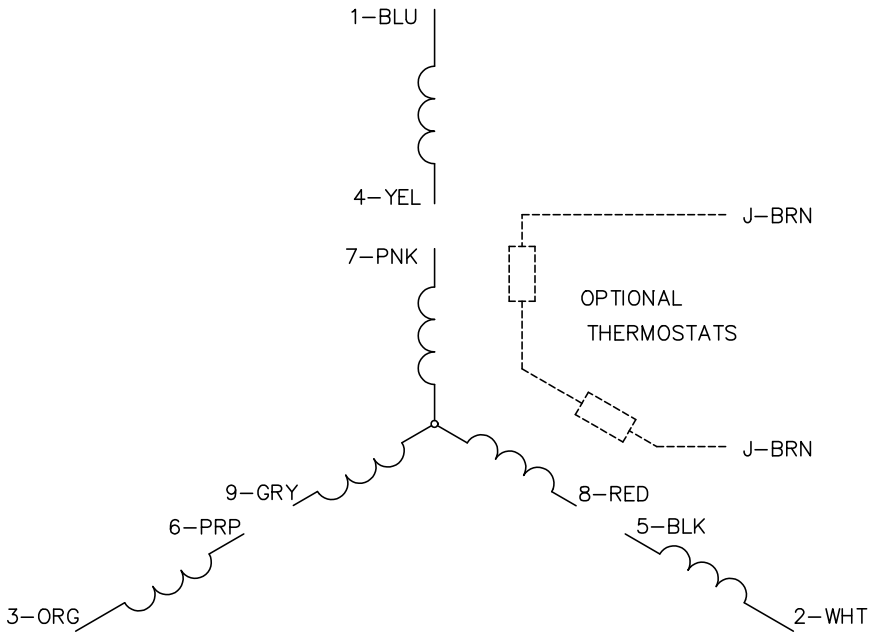

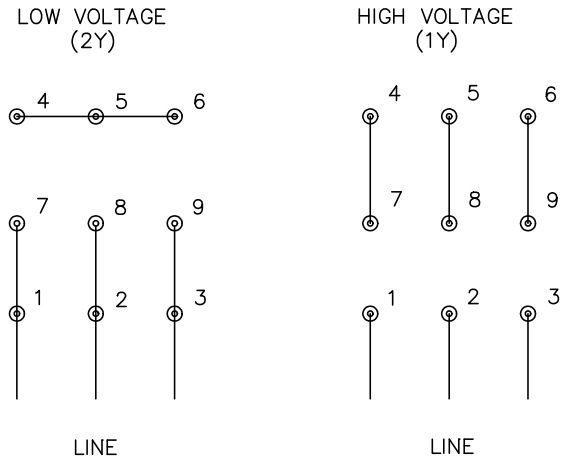

NOTES:

1. INTERCHANGE ANY TWO LINE LEADS TO REVERSE ROTATION.
2. OPTIONAL THERMOSTATS ARE PROVIDED WHEN SPECIFIED.
3. ACTUAL NUMBER OF INTERNAL PARALLEL CIRCUITS MAY BE A MULTIPLE OF THOSE SHOWN ABOVE.
4. LEAD COLORS ARE OPTIONAL. LEADS MUST ALWAYS BE NUMBERED AS SHOWN.

CD0005

REV. DESC: REVISE TO SHOW OPTIONAL COLORS			BALDOR ELECTRIC Co.
REV. LTR: E	BY: JLP	REVISED: 01/19/99 10:15	TDR: 0171435
CD0005		FILE: AAA00005140	MDL: –
		MTL: –	3PH, DV, 9 LEADS