ABB BALDOR RELIANCE

Customer information packet

VFSWDM3555T-E

2HP, 3450RPM, 3PH, 60HZ, 145TC, 3532M, TEFC, F1
Class - None
Division - Not Applicable

Copyright © All product information within this document is subject to ABB Motors and Mechanical Inc. copyright © protection, unless otherwise noted.
11/23/2026 3:27:45 AM

Specifications

Enclosure	TEFC
Frame	145TC
Frame Material	Stainless Steel
Frequency	60.00 Hz
Haz Area Class and Group	None
Haz Area Division	Not Applicable
Motor Letter Type	Three Phase
Output @ Frequency	2.000 HP @ 60 HZ
Phase	3
Synchronous Speed @ Frequency	3600 RPM @ 60 HZ
Voltage @ Frequency	230.0 V @ 60 HZ
	460.0 V @ 60 HZ
Agency Approvals	CSA
	UR
Ambient Temperature	40 °C
Auxiliary Box	NO AUXILLARY BOX
Auxiliary Box Lead Termination	None
Base Indicator	No Mounting
Bearing Grease Type	Polyrex EM (-20F +300F)
Blower	None
Current @ Voltage	5.400 A @ 208.0 V
	5.000 A @ 230.0 V
	2.500 A @ 460.0 V
Design Code	B
Drip Cover	No Drip Cover
Duty Rating	CONT
Efficiency @ 100% Load	86.5 %
Electrically Isolated Bearing	Not Electrically Isolated
Feedback Device	NO FEEDBACK
Front Shaft Indicator	None
Heater Indicator	No Heater
High Voltage Full Load Amps	2.5 a

Part Detail

Revision	N
Type	AC
Mech. spec.	35E4709
Base	
Status	PRD/A
Elec. spec.	35WGR129
Layout	35LYE4709
Eff. date	09-08-2026
CD Diagram	CD0005
Poles	02
Leads	9#18,0#,0#,0# Y
Proprietary	False
Created date	07-11-2017

Insulation Class	H
Inverter Code	Inverter Ready
KVA Code	N
Lifting Lugs	No Lifting Lugs
Locked Bearing Indicator	Locked Bearing
Motor Finish	UNPAINTED
Motor Lead Quantity/Wire Size	@ 0 AWG
	9 @ 18 AWG
Motor Lead Termination	Flying Leads
Motor Standards	NEMA
Motor Type	3532M
Mounting Arrangement	F1
Number of Poles	2
Overall Length	14.90 IN
Power Factor	85
Product Family	WD All SS Encapsulated
Pulley End Bearing Type	Sealed Bearing
Pulley Face Code	C-Face
Pulley Shaft Indicator	Standard
Rodent Screen	None
RoHS Status	ROHS COMPLIANT
Service Factor	1.15
Shaft Diameter	0.875 IN
Shaft Ground Indicator	No Shaft Grounding
Shaft Rotation	Reversible
Shaft Slinger Indicator	No Slinger
Speed	3450 rpm
Speed Code	Single Speed
Starting Method	Direct on line
Thermal Device - Bearing	None
Thermal Device - Winding	None
Vibration Sensor Indicator	No Vibration Sensor
Winding Thermal 1	None
Winding Thermal 2	None

Nameplate

NP4427AAA01												
CAT #	VFSWDM3555T-E			**WT**	50	**LBS**						
SPEC	35E4709R129G1			**ENCL**	TEFC							
SER #				**CC**	010A	**IP**	69					
HP	2			**MAG CUR**	2.2/1.1							
VOLTS	230/460					**NEMA NOM. EFF**	86.5					
AMPS	5/2.5					**PF**	85					
RATING	40C AMB-CONT											
RPM	3450				**MAX RPM**	5400						
FRAME	145TC	**HZ**	60	**CODE**	N	**CLASS**	H					
SER.F.	1.15	**SF AMP**	5.6/2.8			**PH**	3	**DES**	B			
DE	6205			**ODE**	6205							
LUBRICATION	POLYREX EM											
ID LOGO		**INVERTER TYPE**		**VPWM**		**CHP**	60	**TO**	90		1.5:1	
ID LOGO	**WK2**	0.09	**CT**	15	**TO**	60		4:1				
ID LOGO	**SL HZ**	2.5	**VT**	3	**TO**	60		20:1				
						QR						
YR												

AC Induction Motor Performance Data
Record # 57369
Typical performance - not guaranteed values

Winding: 35WGR129-R013	**Type:** 3532M	**Enclosure:** TEFC

Nameplate Data				**460 V, 60 Hz: High Voltage Connection**	
Rated Output (HP)			2	**Full Load Torque**	2.99 LB-FT
Volts			230/460	**Start Configuration**	direct on line
Full Load Amps			5/2.5	**Breakdown Torque**	15.9 LB-FT
R.P.M.			3450	**Pull-up Torque**	9.04 LB-FT
Hz	60	**Phase**	3	**Locked-rotor Torque**	13.8 LB-FT
NEMA Design Code	B	**KVA Code**	N	**Starting Current**	31 A
Service Factor (S.F.)			1.15	**No-load Current**	1.13 A
NEMA Nom. Eff.	86.5	**Power Factor**	85	**Line-line Res. @ 25ºC**	5.59 Ω
Rating - Duty			40C AMB-CONT	**Temp. Rise @ Rated Load**	51°C
S.F. Amps				**Temp. Rise @ S.F. Load**	59°C
				Locked-rotor Power Factor	47.5
				Rotor inertia	0.0885 LB-FT2

Load Characteristics 460 V, 60 Hz, 2 HP

% of Rated Load	**25**	**50**	**75**	**100**	**125**	**150**	**S.F.**
Power Factor	48	70	80	86	89	91	88
Efficiency	75.8	84.9	86.5	87.1	86.6	85.7	86.8
Speed	3574	3549	3525	3500	3471	3441	3483
Line amperes	1.27	1.62	2.03	2.5	3.04	3.6	2.82

ABB Motors and Mechanical Inc.

WINDING # 35WGR129

2 HP 3 PH 60 HZ 3450 RPM 460 V 3532M

Typical performance - not guaranteed values.

TORQUES(LB-FT): PO=15.9 PU=9.04 LR=13.8 LRA=31

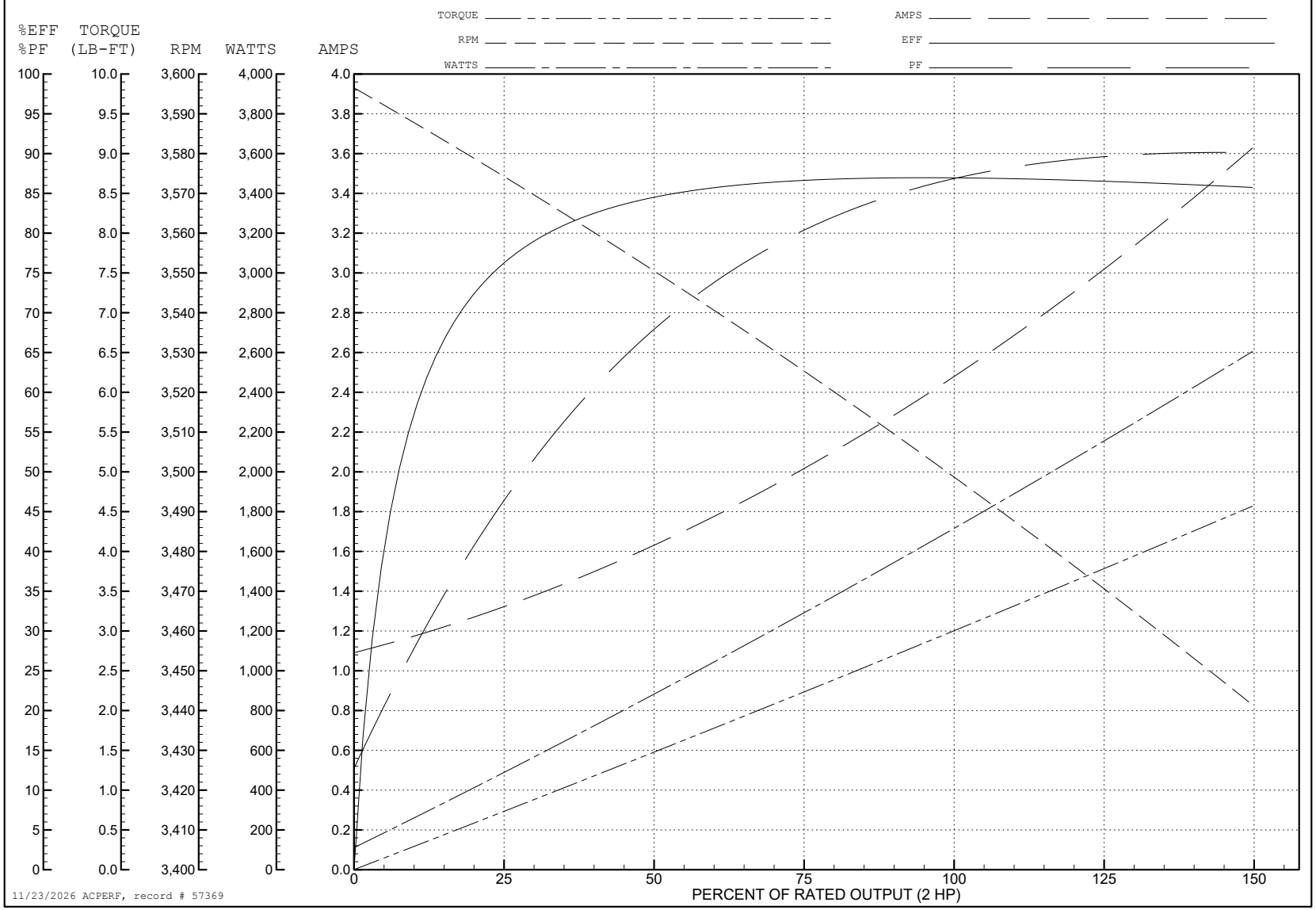

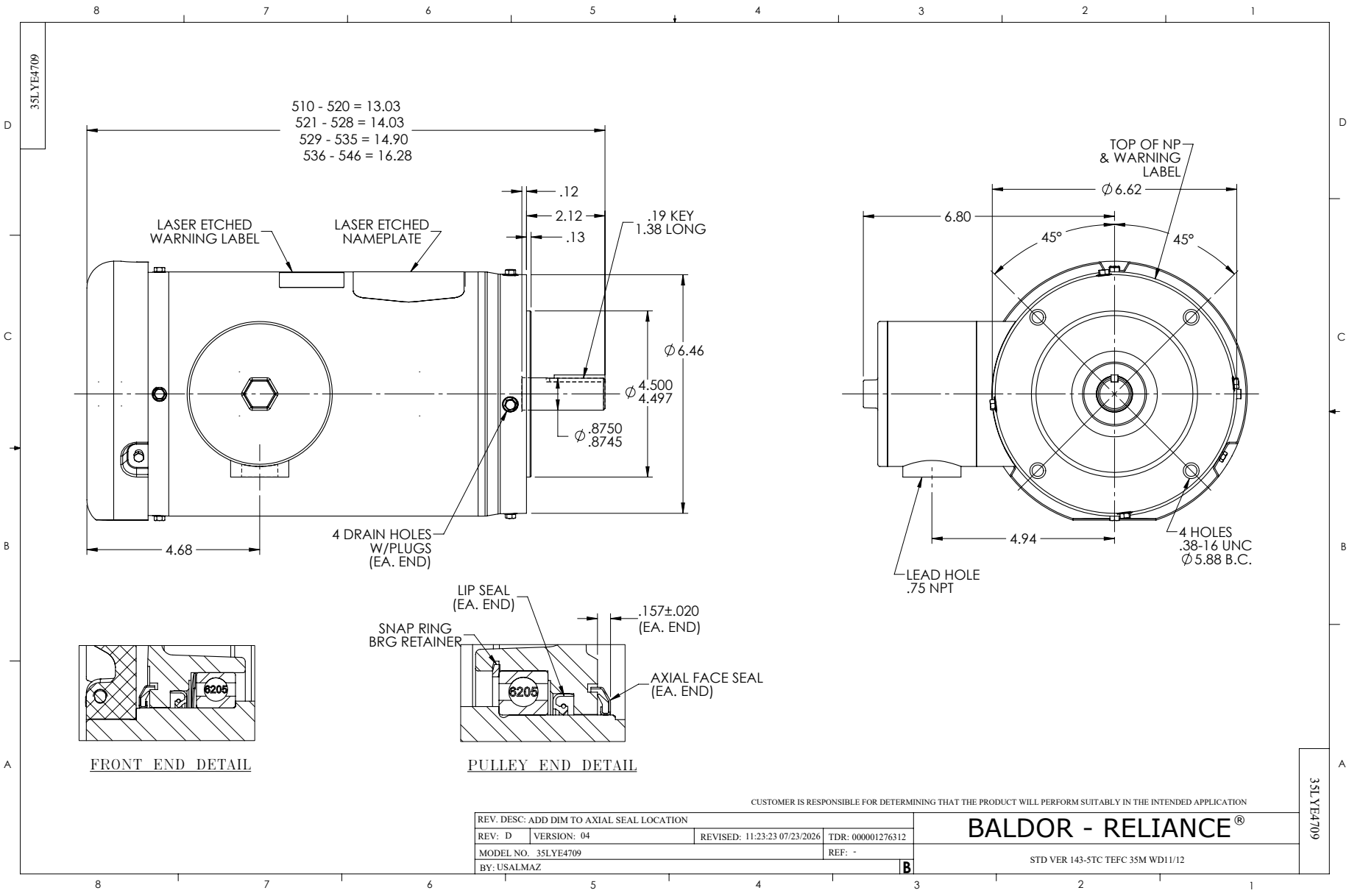
35LYE4709
510 - 520 = 13.03
521 - 528 = 14.03
529 - 535 = 14.90
536 - 546 = 16.28
.12
2.12
.13
.19 KEY
1.38 LONG
LASER ETCHED
WARNING LABEL
LASER ETCHED
NAMEPLATE
Ø6.46
Ø4.500
4.497
Ø.8750
.8745
4.68
4 DRAIN HOLES
W/PLUGS
(EA. END)
TOP OF NP
& WARNING
LABEL
Ø6.62
6.80
45°
45°
4.94
4 HOLES
.38-16 UNC
Ø5.88 B.C.
LEAD HOLE
.75 NPT
LIP SEAL
(EA. END)
.157±.020
(EA. END)
SNAP RING
BRG RETAINER
AXIAL FACE SEAL
(EA. END)
6205
6205
FRONT END DETAIL
PULLEY END DETAIL
CUSTOMER IS RESPONSIBLE FOR DETERMINING THAT THE PRODUCT WILL PERFORM SUITABLY IN THE INTENDED APPLICATION
REV. DESC: ADD DIM TO AXIAL SEAL LOCATION
REV: D
VERSION: 04
REVISED: 11:23:23 07/23/2026
TDR: 000001276312
MODEL NO. 35LYE4709
REF: -
BY: USALMAZ
B
BALDOR - RELIANCE®
STD VER 143-5TC TEFC 35M WD11/12
35LYE4709

CD0005

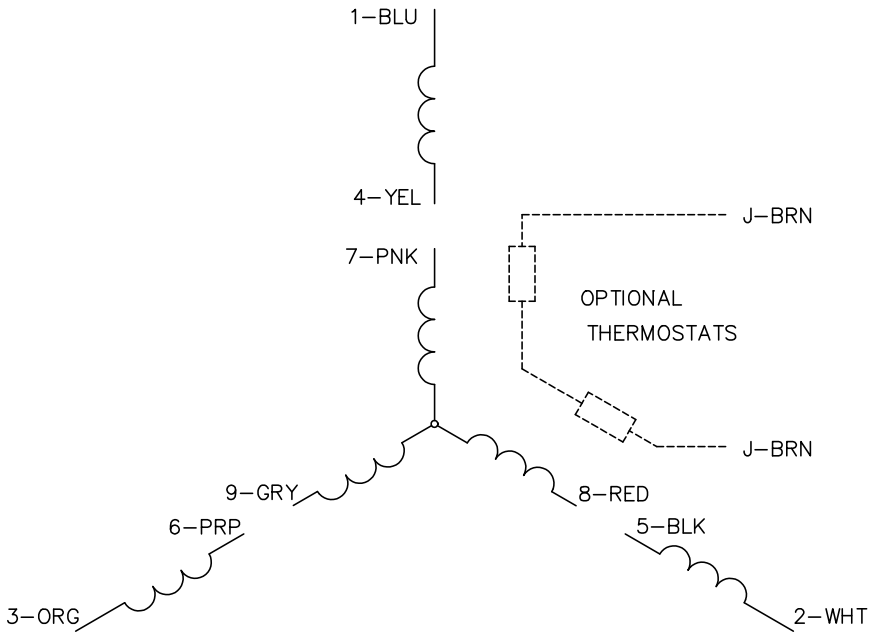

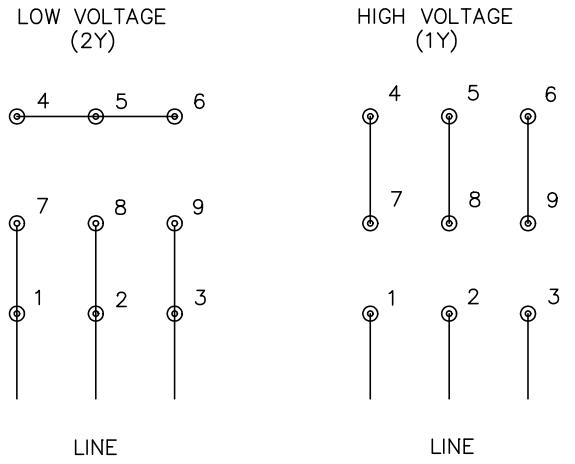

NOTES:

1. INTERCHANGE ANY TWO LINE LEADS TO REVERSE ROTATION.
2. OPTIONAL THERMOSTATS ARE PROVIDED WHEN SPECIFIED.
3. ACTUAL NUMBER OF INTERNAL PARALLEL CIRCUITS MAY BE A MULTIPLE OF THOSE SHOWN ABOVE.
4. LEAD COLORS ARE OPTIONAL. LEADS MUST ALWAYS BE NUMBERED AS SHOWN.

CD0005

REV. DESC: REVISE TO SHOW OPTIONAL COLORS			BALDOR ELECTRIC Co.
REV. LTR: E	BY: JLP	REVISED: 01/19/99 10:15	TDR: 0171435
CD0005		FILE: AAA00005140	MDL: –
		MTL: –	3PH, DV, 9 LEADS