ABB BALDOR RELIANCE

Customer information packet

VFSWDM3554T-E

1.5HP, 1770RPM, 3PH, 60HZ, 145TC, 3526M, TEFC
Class - None
Division - Not Applicable

Copyright © All product information within this document is subject to ABB Motors and Mechanical Inc. copyright © protection, unless otherwise noted.
11/25/2026 11:46:10 PM

Specifications

Enclosure	TEFC
Frame	145TC
Frame Material	Stainless Steel
Frequency	60.00 Hz
Haz Area Class and Group	None
Haz Area Division	Not Applicable
Motor Letter Type	Three Phase
Output @ Frequency	1.500 HP @ 60 HZ
Phase	3
Synchronous Speed @ Frequency	1800 RPM @ 60 HZ
Voltage @ Frequency	230.0 V @ 60 HZ
	460.0 V @ 60 HZ
Agency Approvals	CSA EEV
	CURUSEEV
	NEMA PREMIUM
	NEMA_PREMIUM
	WEEE
Ambient Temperature	40 °C
Auxiliary Box	NO AUXILLARY BOX
Auxiliary Box Lead Termination	None
Base Indicator	No Mounting
Bearing Grease Type	Polyrex EM (-20F +300F)
Blower	None
Current @ Voltage	4.200 A @ 230.0 V
	2.100 A @ 460.0 V
Design Code	B
Drip Cover	No Drip Cover
Duty Rating	CONT
Efficiency @ 100% Load	86.5 %
Electrically Isolated Bearing	Not Electrically Isolated
Feedback Device	NO FEEDBACK
Front Shaft Indicator	None

Part Detail

Revision	C
Type	AC
Mech. spec.	35E4709
Base	
Status	PRD/A
Elec. spec.	35WGZ819
Layout	35LYE4709
Eff. date	09-08-2026
CD Diagram	CD0005
Poles	04
Leads	9#18 Y
Proprietary	False
Created date	03-11-2022

Heater Indicator	No Heater
High Voltage Full Load Amps	2.1 a
Insulation Class	H
Inverter Code	Inverter Ready
KVA Code	M
Lifting Lugs	No Lifting Lugs
Locked Bearing Indicator	Locked Bearing
Max Speed	2700 rpm
Motor Finish	UNPAINTED
Motor Lead Quantity/Wire Size	9 @ 18 AWG
Motor Lead Termination	Flying Leads
Motor Standards	NEMA
Motor Type	3526M
Mounting Arrangement	F1
Number of Poles	4
Overall Length	14.03 IN
Power Factor	76
Product Family	WD All SS Encapsulated
Pulley End Bearing Type	Sealed Bearing
Pulley Face Code	C-Face
Pulley Shaft Indicator	Standard
Rodent Screen	None
Service Factor	1.15
Shaft Diameter	0.875 IN
Shaft Ground Indicator	No Shaft Grounding
Shaft Rotation	Reversible
Shaft Slinger Indicator	No Slinger
Speed	1770 rpm
Speed Code	Single Speed
Starting Method	Direct on line
Thermal Device - Bearing	None
Thermal Device - Winding	None
Vibration Sensor Indicator	No Vibration Sensor
Winding Thermal 1	None

Winding Thermal 2	None

Nameplate

NP4427AAA01												
CAT #	VFSWDM3554T-E			**WT**	41	**LBS**						
SPEC	35E4709Z819G1			**ENCL**	TEFC							
SER #				**CC**	010A	**IP**	69					
HP	1.5			**MAG CUR**	2.5/1.25							
VOLTS	230/460					**NEMA NOM. EFF**	86.5					
AMPS	4.2/2.1					**PF**	76					
RATING	40C AMB-CONT											
RPM	1770				**MAX RPM**	2700						
FRAME	145TC	**HZ**	60	**CODE**	M	**CLASS**	H					
SER.F.	1.15	**SF AMP**	4.7/2.35			**PH**	3	**DES**	B			
DE	6205			**ODE**	6205							
LUBRICATION	POLYREX EM											
ID LOGO		**INVERTER TYPE**		**VPWM**		**CHP**	60	**TO**	90		1.5:1	
ID LOGO	**WK2**	0.189	**CT**	15	**TO**	60		4:1				
ID LOGO	**SL HZ**	1	**VT**	3	**TO**	60		20:1				
						QR						
YR												

AC Induction Motor Performance Data
Record # 87353
Preliminary Data Sheet

Winding: 35WGZ819-R001	**Type:** 3526M	**Enclosure:** TEFC

Nameplate Data				**460 V, 60 Hz: High Voltage Connection**	
Rated Output (HP)			1.5	**Full Load Torque**	4.47 LB-FT
Volts			230/460	**Start Configuration**	direct on line
Full Load Amps			4.2/2.1	**Breakdown Torque**	18.92 LB-FT
R.P.M.			1770	**Pull-up Torque**	9.99 LB-FT
Hz	60	**Phase**	3	**Locked-rotor Torque**	12.27 LB-FT
NEMA Design Code	B	**KVA Code**	M	**Starting Current**	19.68 A
Service Factor (S.F.)			1.15	**No-load Current**	1.24 A
NEMA Nom. Eff.	86.5	**Power Factor**	76	**Line-line Res. @ 25ºC**	11.5 Ω
Rating - Duty			40C AMB-CONT	**Temp. Rise @ Rated Load**	37°C
S.F. Amps			4.7/2.35	**Temp. Rise @ S.F. Load**	44°C
				Locked-rotor Power Factor	59.3
				Rotor inertia	0.188 lb-ft²

Load Characteristics 460 V, 60 Hz, 1.5 HP

% of Rated Load	**25**	**50**	**75**	**100**	**125**	**150**	**S.F.**
Power Factor	36	55	68	76	81	84	79
Efficiency	77.4	85.3	87.5	87.7	87.2	86	87.4
Speed	1793	1786	1780	1772	1765	1756	1768
Line amperes	1.32	1.5	1.78	2.11	2.49	2.92	2.34

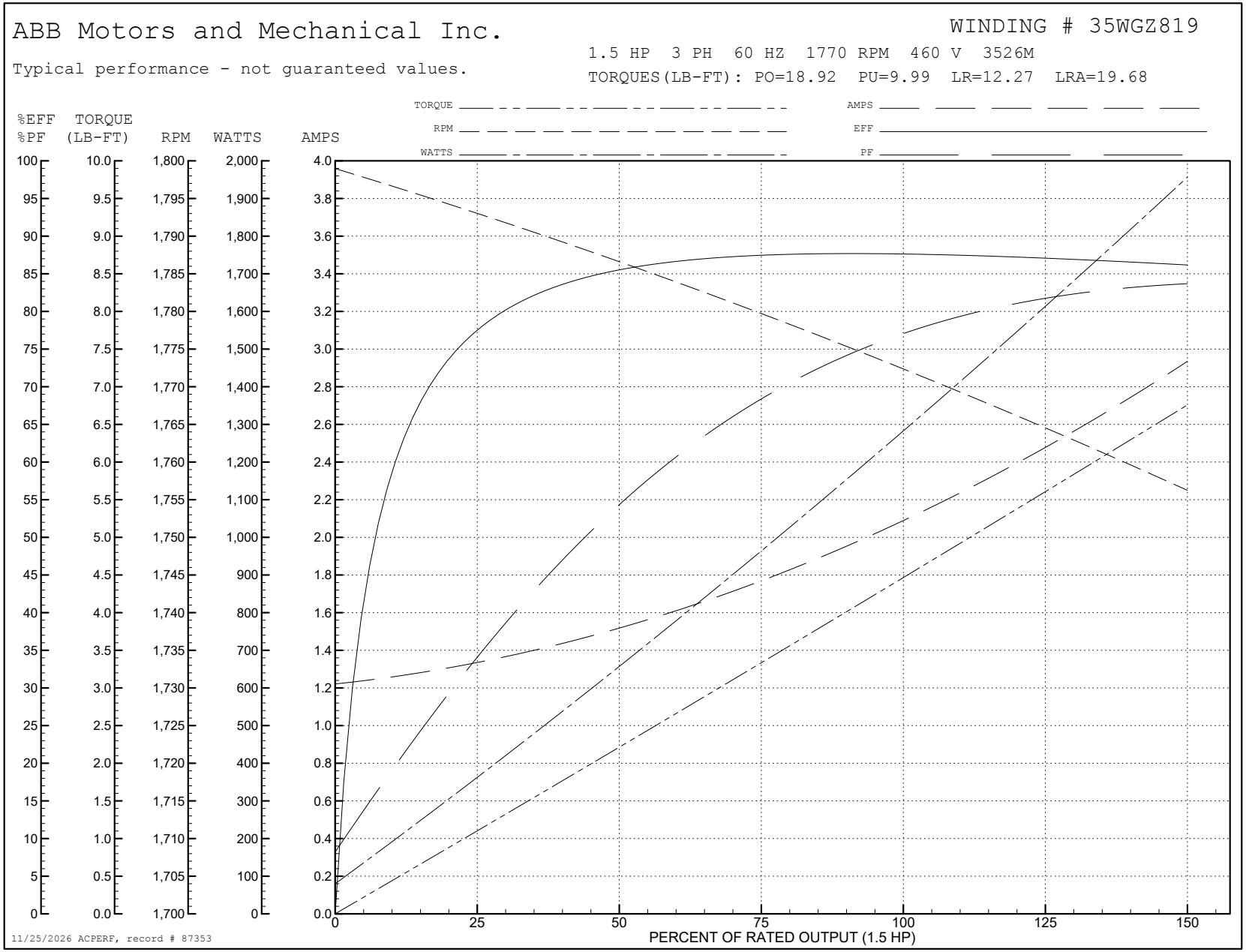
ABB Motors and Mechanical Inc.
WINDING # 35WGZ819
1.5 HP 3 PH 60 HZ 1770 RPM 460 V 3526M
Typical performance - not guaranteed values.
TORQUES(LB-FT): PO=18.92 PU=9.99 LR=12.27 LRA=19.68
TORQUE
RPM
WATTS
AMPS
EFF
PF
%EFF %PF
TORQUE (LB-FT)
RPM
WATTS
AMPS
PERCENT OF RATED OUTPUT (1.5 HP)
11/25/2026 ACPERF, record # 87353

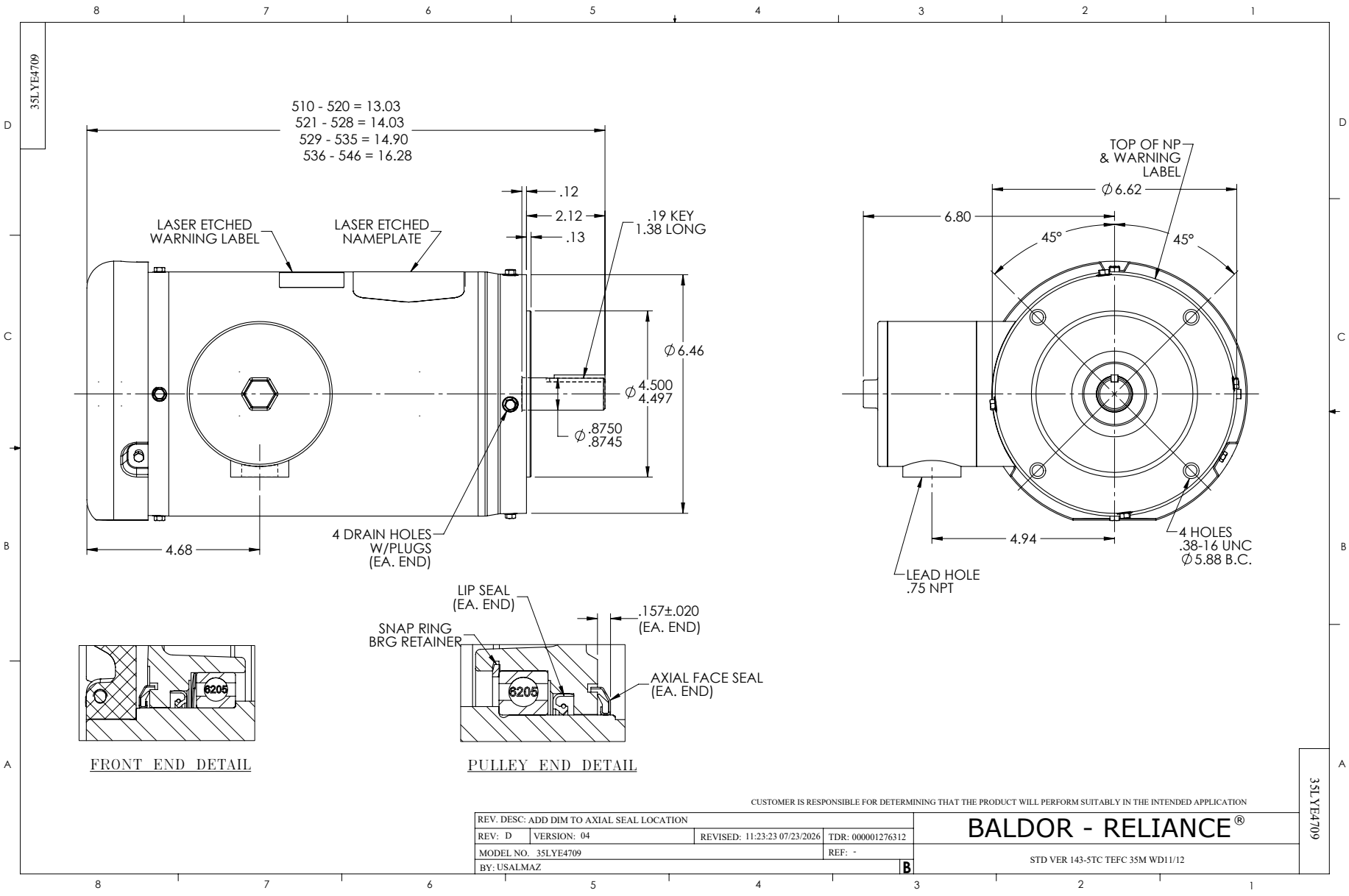
35LYE4709
510 - 520 = 13.03
521 - 528 = 14.03
529 - 535 = 14.90
536 - 546 = 16.28
.12
2.12
.13
.19 KEY
1.38 LONG
LASER ETCHED
WARNING LABEL
LASER ETCHED
NAMEPLATE
Ø6.46
Ø4.500
4.497
Ø.8750
.8745
4.68
4 DRAIN HOLES
W/PLUGS
(EA. END)
TOP OF NP
& WARNING
LABEL
Ø6.62
6.80
45°
45°
4.94
4 HOLES
.38-16 UNC
Ø5.88 B.C.
LEAD HOLE
.75 NPT
LIP SEAL
(EA. END)
.157±.020
(EA. END)
SNAP RING
BRG RETAINER
AXIAL FACE SEAL
(EA. END)
6205
6205
FRONT END DETAIL
PULLEY END DETAIL
CUSTOMER IS RESPONSIBLE FOR DETERMINING THAT THE PRODUCT WILL PERFORM SUITABLY IN THE INTENDED APPLICATION
REV. DESC: ADD DIM TO AXIAL SEAL LOCATION
REV: D
VERSION: 04
REVISED: 11:23:23 07/23/2026
TDR: 000001276312
MODEL NO. 35LYE4709
REF: -
BY: USALMAZ
B
BALDOR - RELIANCE®
STD VER 143-5TC TEFC 35M WD11/12
35LYE4709

CD0005

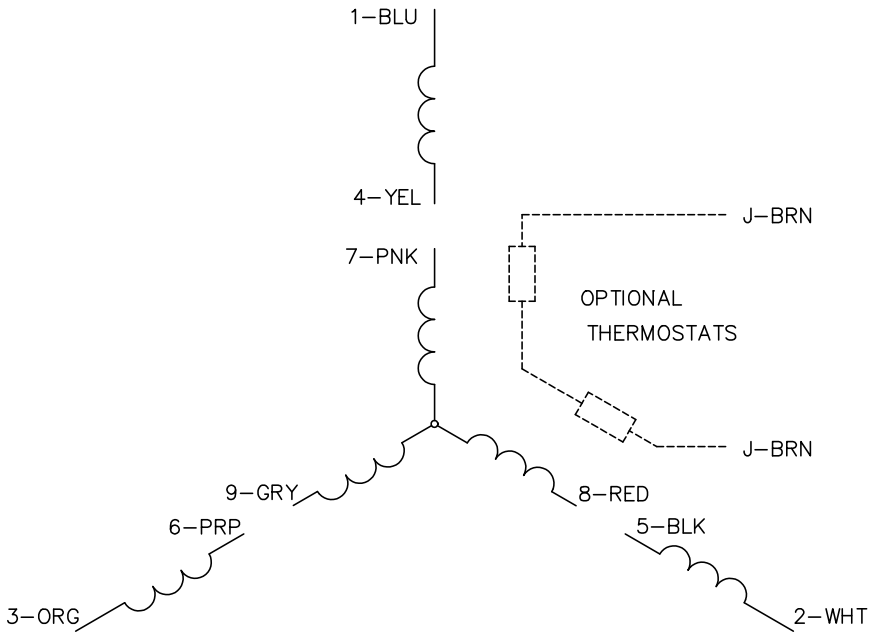

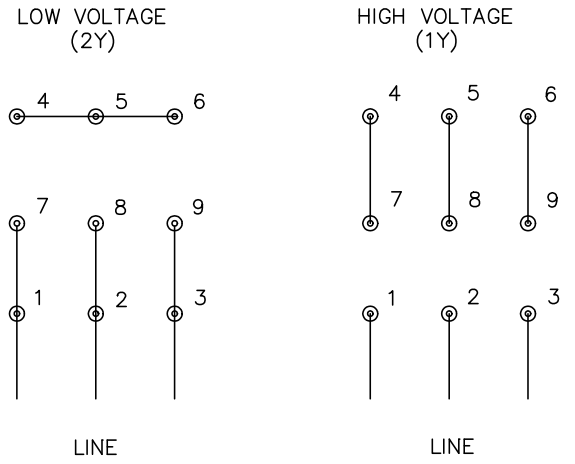

NOTES:

1. INTERCHANGE ANY TWO LINE LEADS TO REVERSE ROTATION.
2. OPTIONAL THERMOSTATS ARE PROVIDED WHEN SPECIFIED.
3. ACTUAL NUMBER OF INTERNAL PARALLEL CIRCUITS MAY BE A MULTIPLE OF THOSE SHOWN ABOVE.
4. LEAD COLORS ARE OPTIONAL. LEADS MUST ALWAYS BE NUMBERED AS SHOWN.

CD0005

REV. DESC: REVISE TO SHOW OPTIONAL COLORS			BALDOR ELECTRIC Co.
REV. LTR: E	BY: JLP	REVISED: 01/19/99 10:15	TDR: 0171435
CD0005		FILE: AAA00005140	MDL: –
		MTL: –	3PH, DV, 9 LEADS