ABB BALDOR RELIANCE

Customer information packet

VFDL3504M

.5HP, 1725RPM, 1PH, 60HZ, 56C, 3421L, TEFC, F1
Class - None
Division - Not Applicable

Copyright © All product information within this document is subject to ABB Motors and Mechanical Inc. copyright © protection, unless otherwise noted.
11/28/2026 12:08:02 PM

Specifications

Enclosure	TEFC
Frame	56C
Frame Material	Steel
Frequency	60.00 Hz
Haz Area Class and Group	None
Haz Area Division	Not Applicable
Motor Letter Type	Cap Start, Induction Run
Output @ Frequency	.500 HP @ 60 HZ
Phase	1
Synchronous Speed @ Frequency	1800 RPM @ 60 HZ
Voltage @ Frequency	115.0 V @ 60 HZ
	230.0 V @ 60 HZ
Agency Approvals	UR
	CSA
Ambient Temperature	40 °C
Auxiliary Box	NO AUXILLARY BOX
Auxiliary Box Lead Termination	None
Base Indicator	No Mounting
Bearing Grease Type	Polyrex EM (-20F +300F)
Blower	None
Current @ Voltage	3.700 A @ 230.0 V
	4.300 A @ 208.0 V
	7.400 A @ 115.0 V
Design Code	N
Drip Cover	No Drip Cover
Duty Rating	CONT
Efficiency @ 100% Load	68.0 %
Electrically Isolated Bearing	Not Electrically Isolated
Feedback Device	NO FEEDBACK
Front Face Code	Standard
Front Shaft Indicator	None
Heater Indicator	No Heater

Part Detail

Revision	P
Type	AC
Mech. spec.	34M372
Base	
Status	PRD/A
Elec. spec.	34WGW722
Layout	34LYM372
Eff. date	07-25-2024
CD Diagram	CD0008
Poles	04
Leads	6#18,1#16 #4TH
Proprietary	False
Created date	11-26-2013

High Voltage Full Load Amps	3.7 a
Insulation Class	B
Inverter Code	Not Inverter
KVA Code	J
Lifting Lugs	No Lifting Lugs
Locked Bearing Indicator	Locked Bearing
Motor Lead Exit	Ko Box
Motor Lead Quantity/Wire Size	6 @ 18 AWG
Motor Lead Termination	Flying Leads
Motor Standards	NEMA
Motor Type	3421L
Mounting Arrangement	F1
Number of Poles	4
Overall Length	11.97 IN
Power Factor	66
Product Family	General Purpose
Pulley End Bearing Type	Sealed Bearing
Pulley Face Code	C-Face
Pulley Shaft Indicator	Standard
Rodent Screen	None
RoHS Status	ROHS COMPLIANT
Service Factor	1.25
Shaft Diameter	0.625 IN
Shaft Extension Location	Pulley End
Shaft Ground Indicator	No Shaft Grounding
Shaft Rotation	Reversible
Shaft Slinger Indicator	Shaft Slinger
Speed	1725 rpm
Speed Code	Single Speed
Starting Method	Direct on line
Thermal Device - Bearing	None
Thermal Device - Winding	None
Vibration Sensor Indicator	No Vibration Sensor
Winding Thermal 1	Manual Thermal Overload

Winding Thermal 1 Location	KO
Winding Thermal 2	None

Nameplate

NP1280L									
CAT.NO.	VFDL3504M								
SPEC.	34M372W722G1								
HP	.5								
VOLTS	115/230								
AMP	7.4/3.7								
RPM	1725								
FRAME	56C	**HZ**	60		**PH**	1			
SER.F.	1.25	**CODE**	J	**DES**	N	**CL**	B		
NEMA-NOM-EFF	68	**PF**	66						
RATING	40C AMB-CONT								
CC									
DE	6203	**ODE**	6203						
ENCL	TEFC	**SN**							
	SFA 8.2/4.1								

AC Induction Motor Performance Data
Record # 7082
Typical performance - not guaranteed values

Winding: 34WGW722-R001	**Type:** 3421L	**Enclosure:** TEFC

Nameplate Data				**230 V, 60 Hz: High Voltage Connection**	
Rated Output (HP)			.5	**Full Load Torque**	1.5 LB-FT
Volts			115/230	**Start Configuration**	direct on line
Full Load Amps			7.4/3.7	**Breakdown Torque**	4.13 LB-FT
R.P.M.			1725	**Pull-up Torque**	3.6 LB-FT
Hz	60	**Phase**	1	**Locked-rotor Torque**	4.65 LB-FT
NEMA Design Code	N	**KVA Code**	J	**Starting Current**	16.5 A
Service Factor (S.F.)			1.25	**No-load Current**	2.8 A
NEMA Nom. Eff.	68	**Power Factor**	66	**Line-line Res. @ 25ºC**	4.44 Ω A Ph 3.19 Ω B Ph
Rating - Duty			40C AMB-CONT	**Temp. Rise @ Rated Load**	63°C
S.F. Amps			8.2/4.1	**Temp. Rise @ S.F. Load**	77°C

Load Characteristics 230 V, 60 Hz, 0.5 HP

% of Rated Load	**25**	**50**	**75**	**100**	**125**	**150**	**S.F.**
Power Factor	32	46	59	66	72	80	72
Efficiency	42	58	65	68	69	68	69
Speed	1783	1765	1750	1730	1710	1680	1710
Line amperes	2.8	3	3.3	3.7	4.1	4.8	4.1

ABB Motors and Mechanical Inc.

WINDING # 34WGW722

0.5 HP 1 PH 60 HZ 1725 RPM 230 V 3421L

Typical performance - not guaranteed values.

TORQUES(LB-FT): PO=4.13 PU=3.6 LR=4.65 LRA=16.5

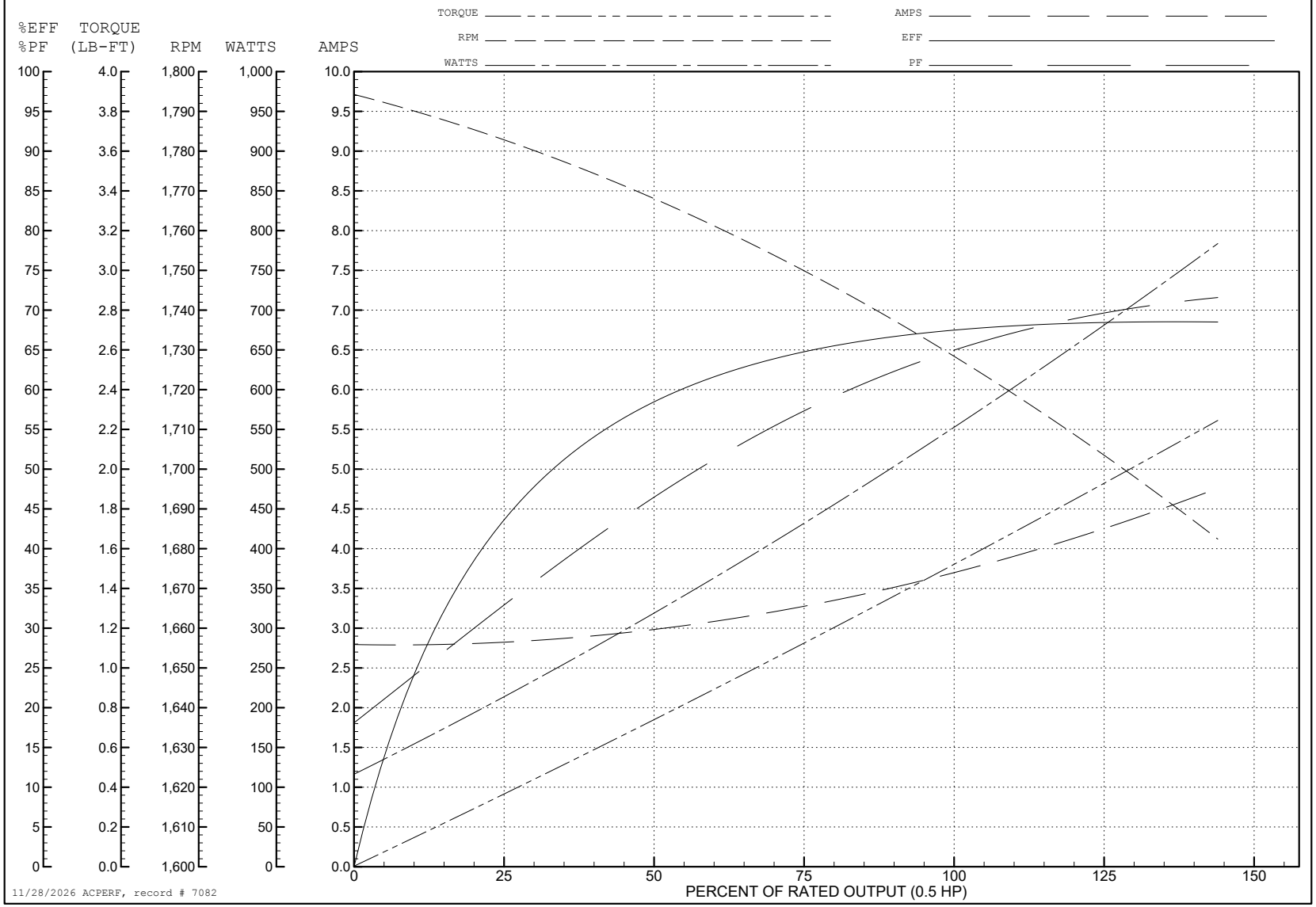

11/28/2026 ACPERF, record # 7082

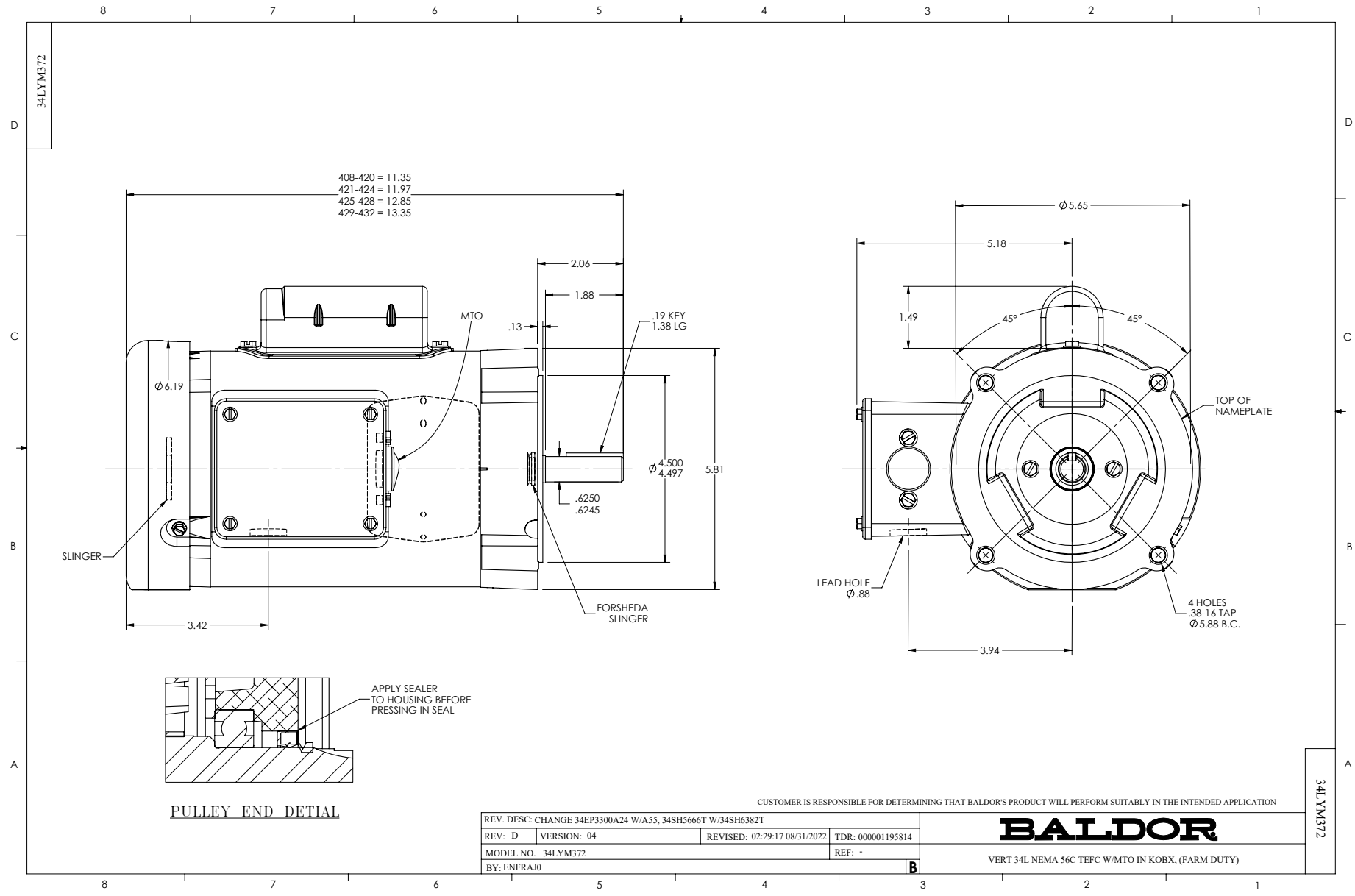
34LYM372
408-420 = 11.35
421-424 = 11.97
425-428 = 12.85
429-432 = 13.35
2.06
1.88
.13
MTO
.19 KEY
1.38 LG
Ø6.19
Ø 4.500
4.497
5.81
.6250
.6245
SLINGER
FORSHEDA
SLINGER
3.42
Ø5.65
5.18
1.49
45°
45°
TOP OF
NAMEPLATE
LEAD HOLE
Ø.88
4 HOLES
.38-16 TAP
Ø5.88 B.C.
3.94
APPLY SEALER
TO HOUSING BEFORE
PRESSING IN SEAL
PULLEY END DETIAL
CUSTOMER IS RESPONSIBLE FOR DETERMINING THAT BALDOR'S PRODUCT WILL PERFORM SUITABLY IN THE INTENDED APPLICATION
REV. DESC: CHANGE 34EP3300A24 W/A55, 34SH5666T W/34SH6382T
REV: D
VERSION: 04
REVISED: 02:29:17 08/31/2022
TDR: 000001195814
MODEL NO. 34LYM372
REF: -
BY: ENFRAJ0
B
BALDOR
VERT 34L NEMA 56C TEFC W/MTO IN KOBX, (FARM DUTY)
34LYM372

CD0008

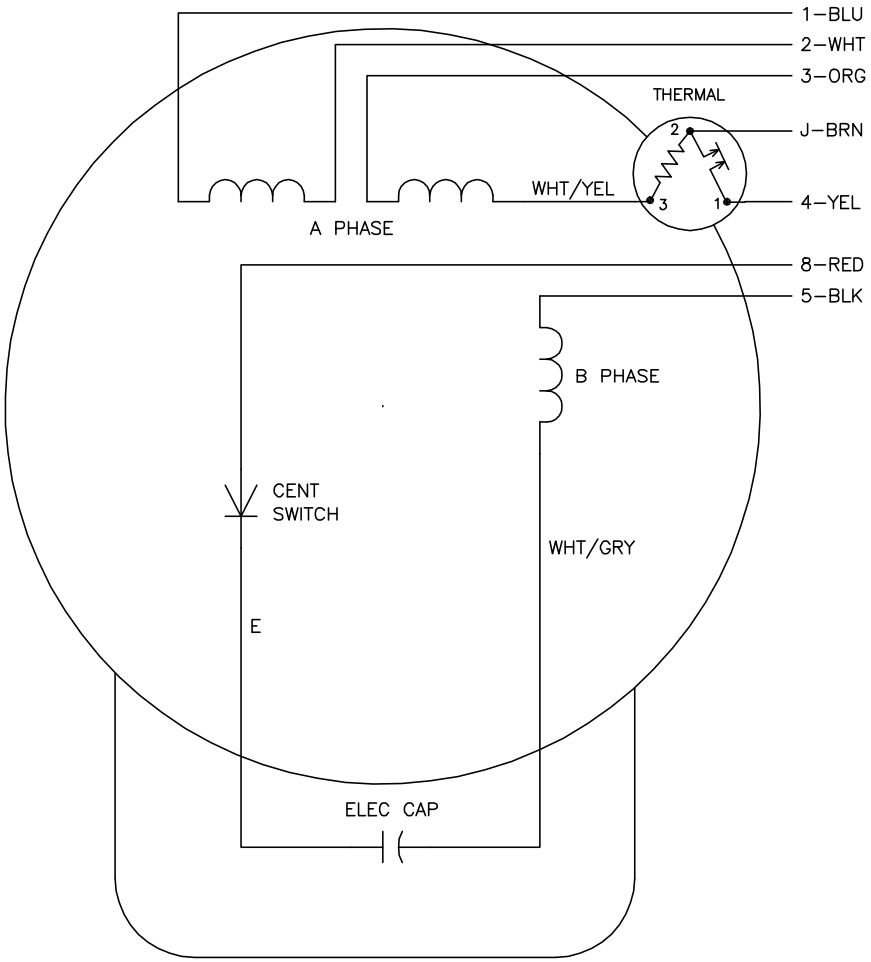

	LINE A	LINE B	JOIN	JOIN
HIGH STD	1	4	2,3,8	J,5
HIGH OPP	1	4	2,3,5	J,8
LOW STD	1,3,8	4	–	2,J,5
LOW OPP	1,3,5	4	–	2,J,8

NOTES:

1. STANDARD ROTATION IS CCW FACING END OPPOSITE SHAFT EXTENSION.
2. MULTIPLE CAPACITORS ARE CONNECTED IN PARALLEL UNLESS OTHERWISE SPECIFIED.
3. LEAD COLORS ARE OPTIONAL. LEADS MUST ALWAYS BE NUMBERED AS SHOWN.

CD0008

REV. DESC: REMOVE 2–TERMINAL THERMAL DETAIL, SEE CD0008A02			BALDOR ELECTRIC Co.
REV. LTR: F	VERSION: 01	TDR: 000000360649	
CD0008	FILE: \AAA\00007\408	REVISED: 10:56:54 04/18/2005	TYPE L, DV, REV, THERMAL, 7 LEADS
	MTL: –	BY: ENJOEP0	