35LY-000-013

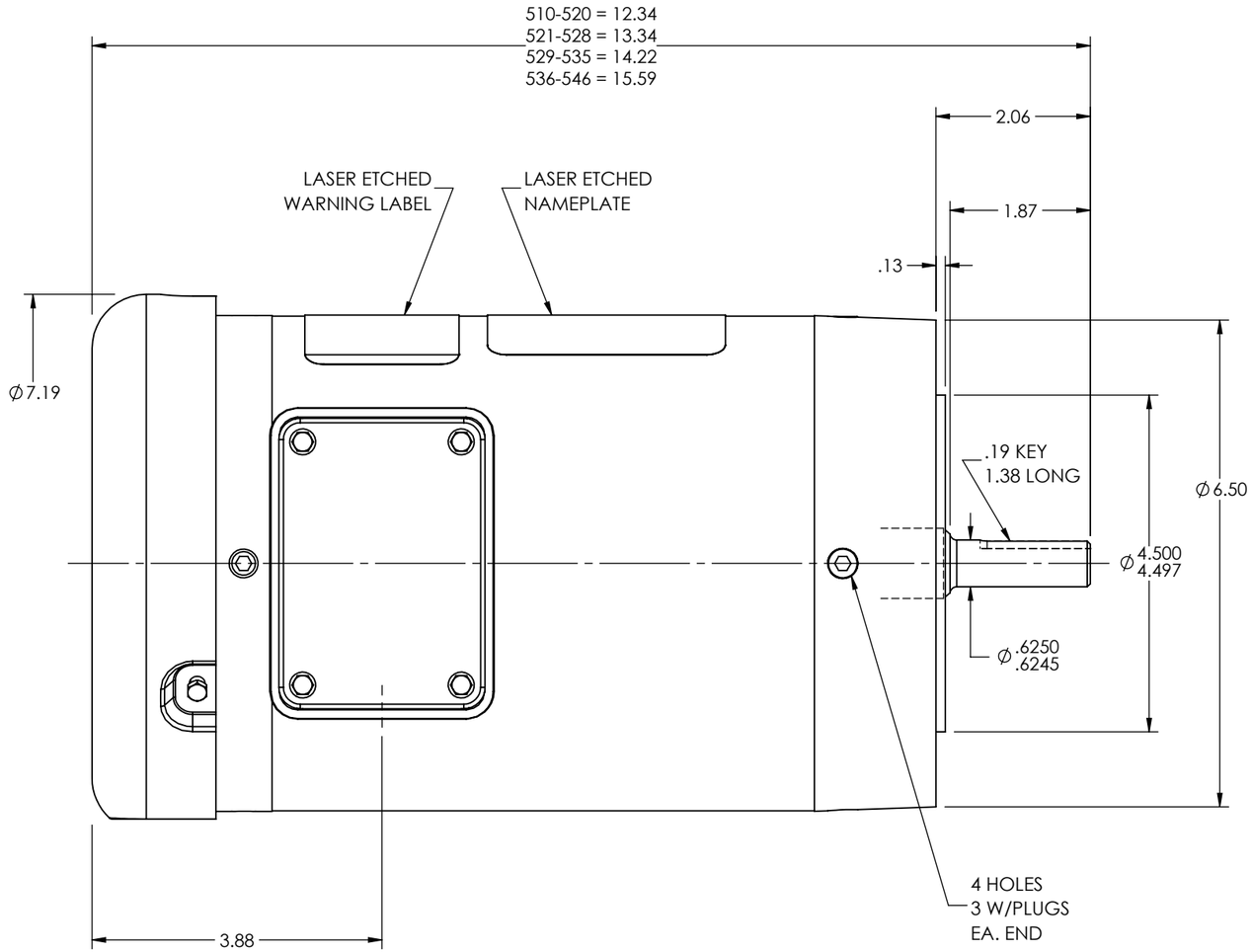

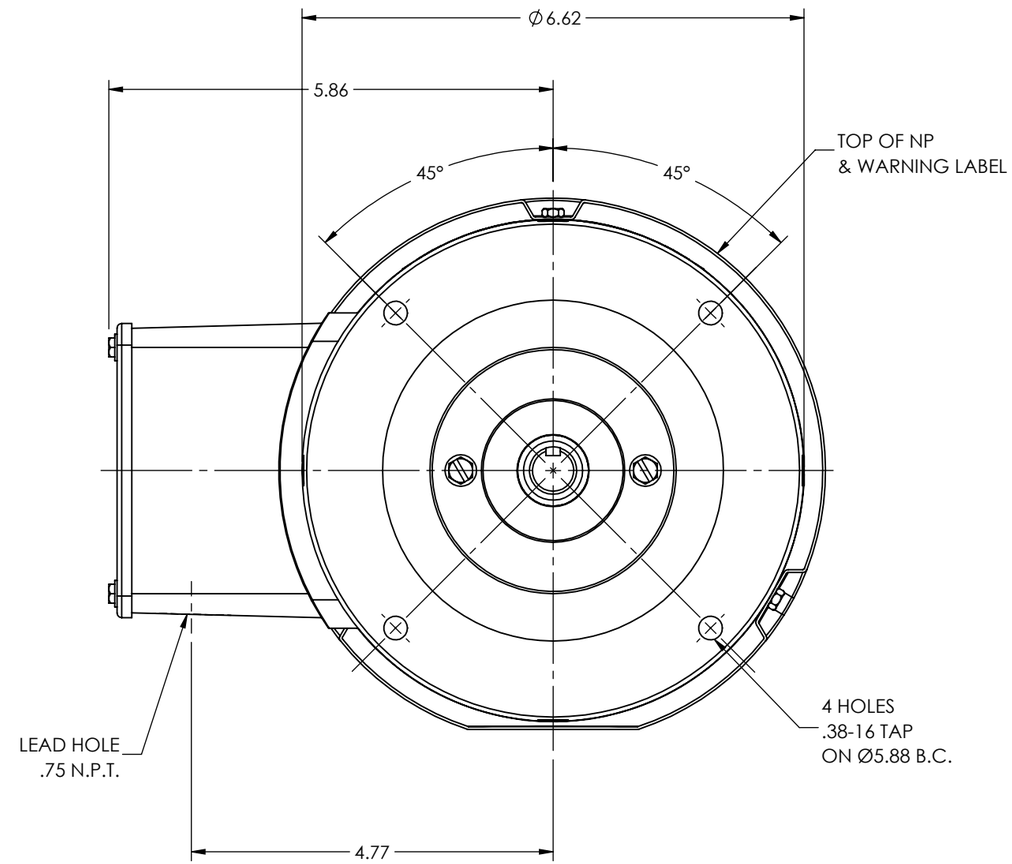

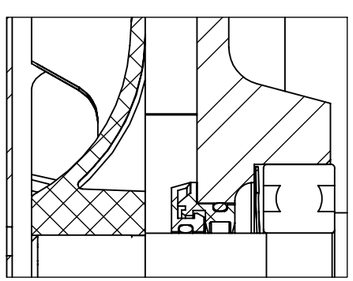

FRONT END DETAIL

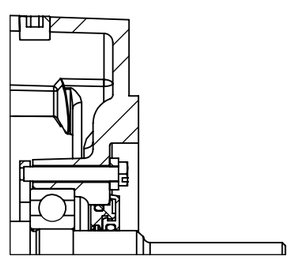

PULLEY END DETAIL

CUSTOMER IS RESPONSIBLE FOR DETERMINING THAT THE PRODUCT WILL PERFORM SUITABLY IN THE INTENDED APPLICATION

REV. DESC: NEW			
REV: -	VERSION: 00	REVISED: 09:46:40 02/15/2019	TDR: 000001098185
MODEL NO. 35LY-000-013			REF: -
BY: ENMICW1			B

BALDOR - RELIANCE®

VER 56C TEFC 35M WD4,LOCKED PU BRG,LASER ETCHED BAND,.75 NPT
SH 1 OF 1

35LY-000-013