36LYG843

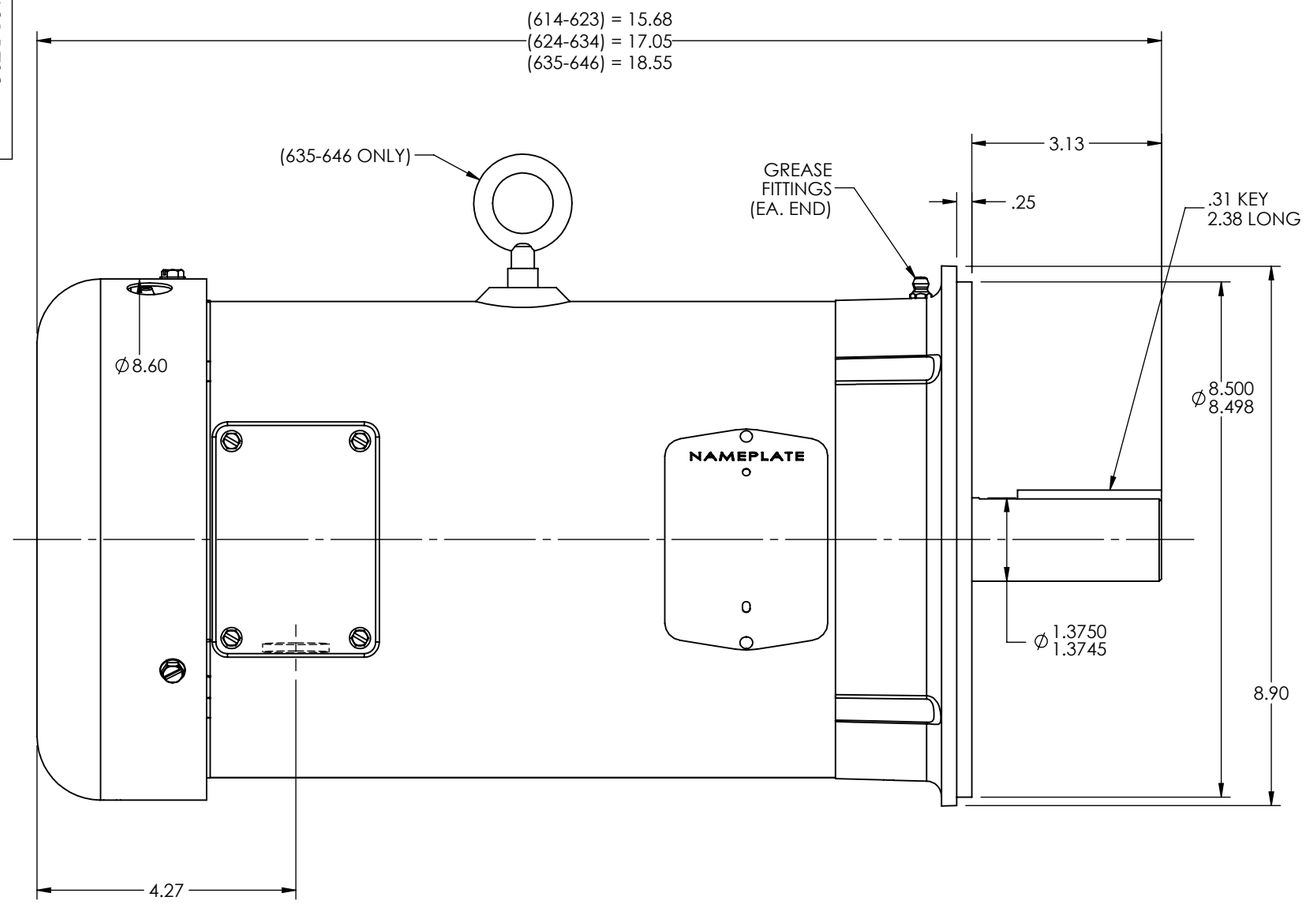

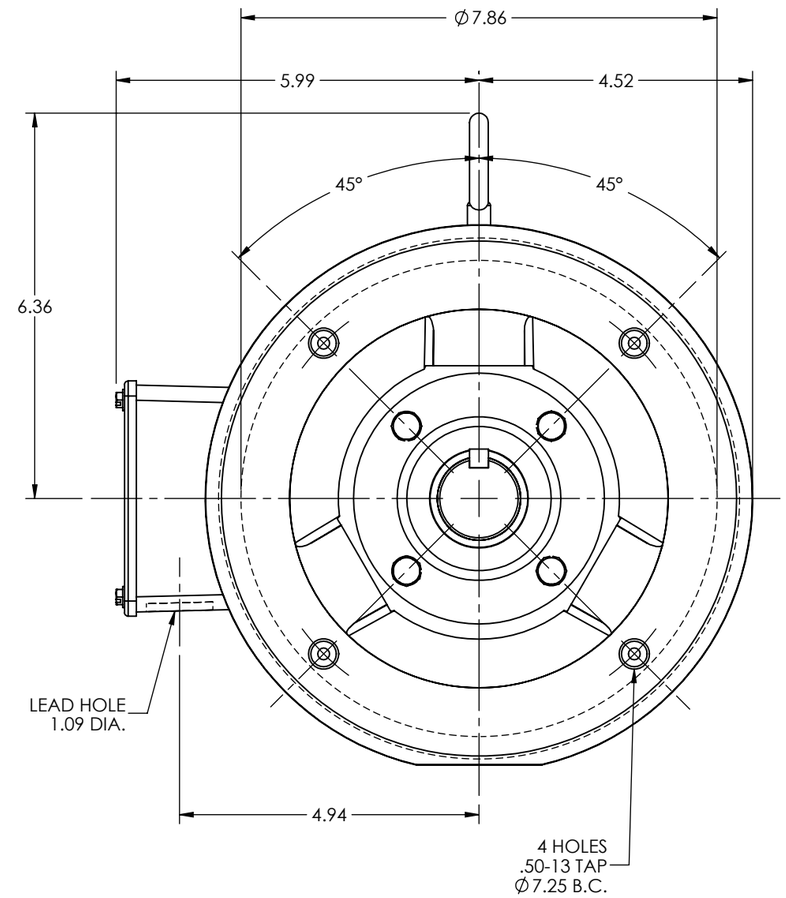

CUSTOMER IS RESPONSIBLE FOR DETERMINING THAT BALDOR'S PRODUCT WILL PERFORM SUITABLY IN THE INTENDED APPLICATION

REV. DESC: CONVERT STOCK LAYOUTS FROM AUTOCAD TO SWD			
REV: D	VERSION: 02	REVISED: 01:45:00 12/12/2023	TDR: 000001220227
MODEL NO. 36LYG843			REF: -
BY: USALMAZ			B

BALDOR

STANDARD VERT 213TC-5TC TEFC 36M

36LYG843