36LYM655

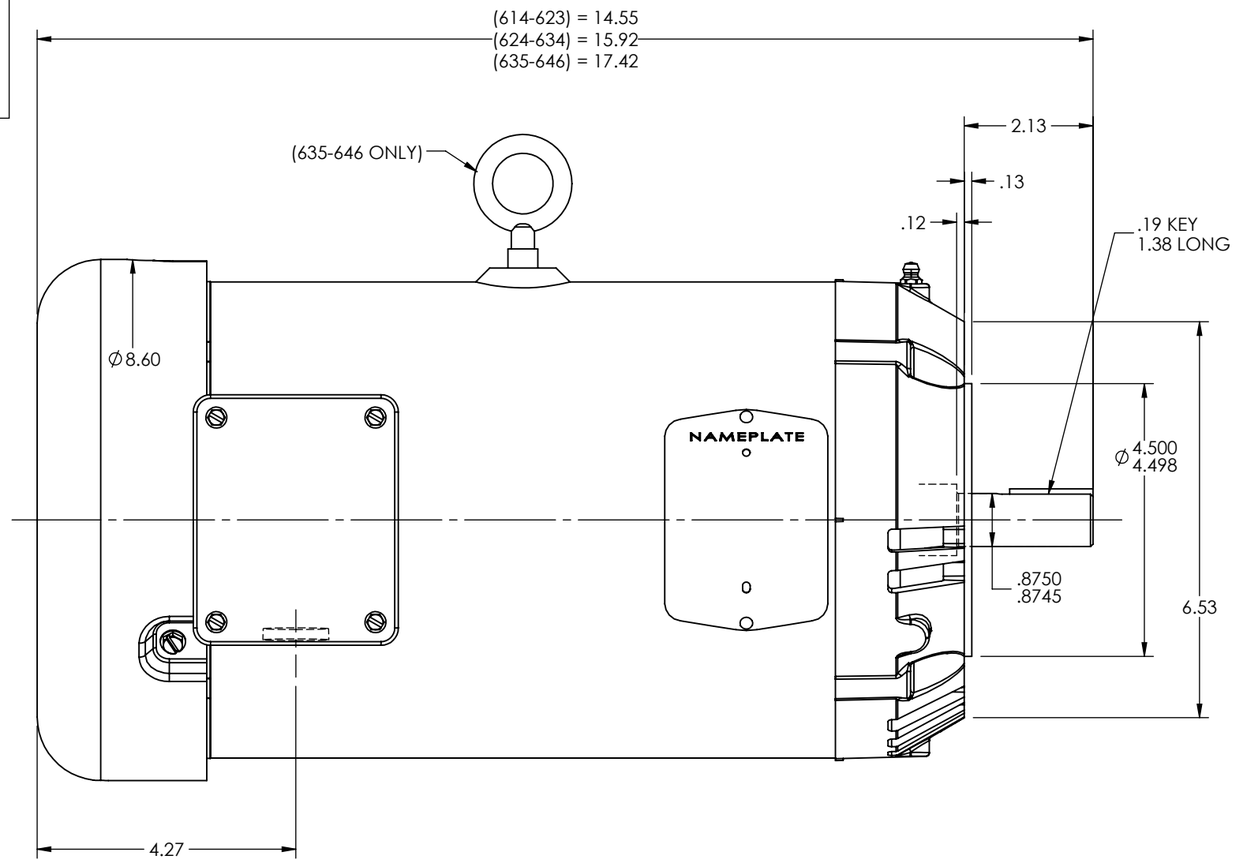

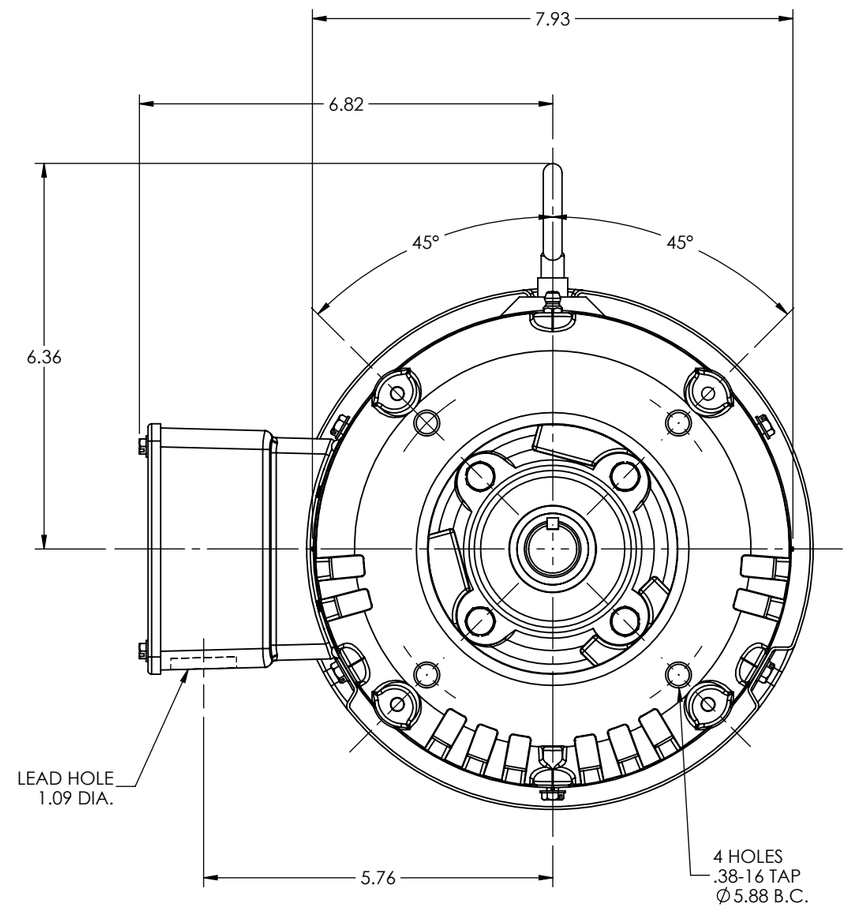

36LYM655

CUSTOMER IS RESPONSIBLE FOR DETERMINING THAT BALDOR'S PRODUCT WILL PERFORM SUITABLY IN THE INTENDED APPLICATION

REV. DESC: CONVERT STOCK LAYOUTS FROM AUTOCAD TO SWD			
REV: E	VERSION: 05	REVISED: 08:52:55 12/13/2023	TDR: 000001220227
MODEL NO. 36LYM655			REF: -
BY: USALMAZ			B

BALDOR

VERT 143-5TC OPEN M, 6306 PU BRG, DRIP COVER W/O EXT FAN

36LYM655