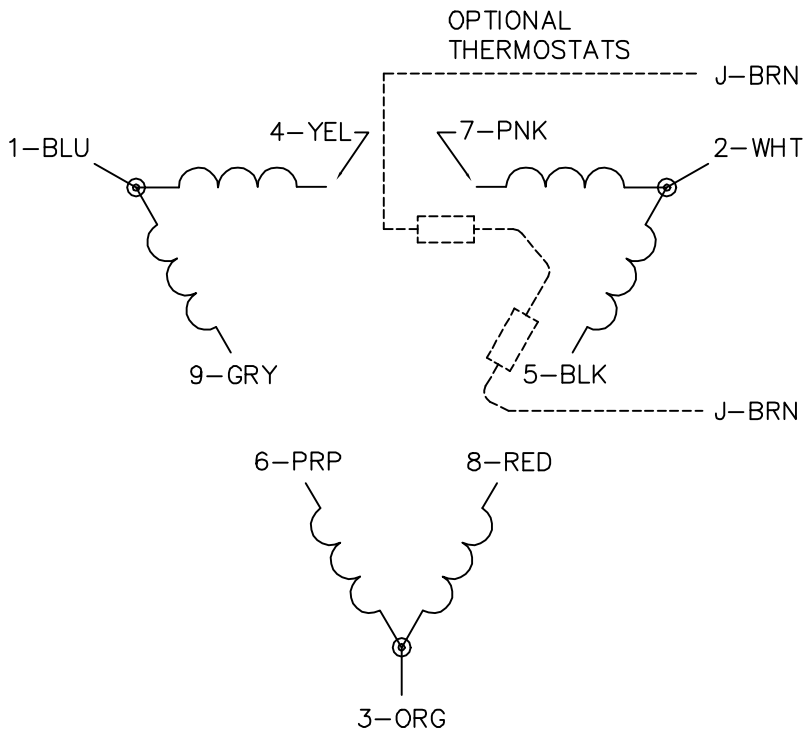


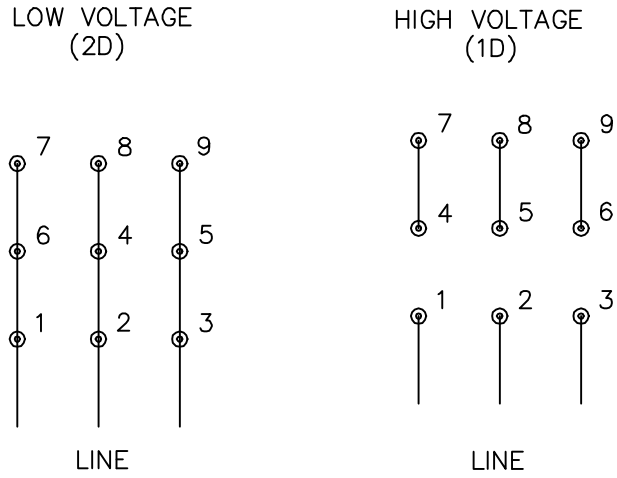


NOTES:

1. INTERCHANGE ANY TWO LINE LEADS TO REVERSE ROTATION.
2. OPTIONAL THERMOSTATS ARE PROVIDED WHEN SPECIFIED.
3. ACTUAL NUMBER OF INTERNAL PARALLEL CIRCUITS MAY BE A MULTIPLE OF THOSE SHOWN ABOVE.
4. LEAD COLORS ARE OPTIONAL. LEADS MUST ALWAYS BE NUMBERED AS SHOWN.

CD0180

| | | |
|---|---|---|
| REV. DESC: ADD CLASS CONN00000007 | | |
| REV. LTR: D | VERSION: 01 | TDR: 000001099922 |
| FILE: \AAA\00005\148 | REVISED: 10:25:29 02/19/2019 | BY: ENBRIR0 |
| MTL: – | | |

BALDOR - RELIANCE®

3PH, DV, 9 LEADS, DELTA CONNECTION

SH 1 of 1