10LYH462

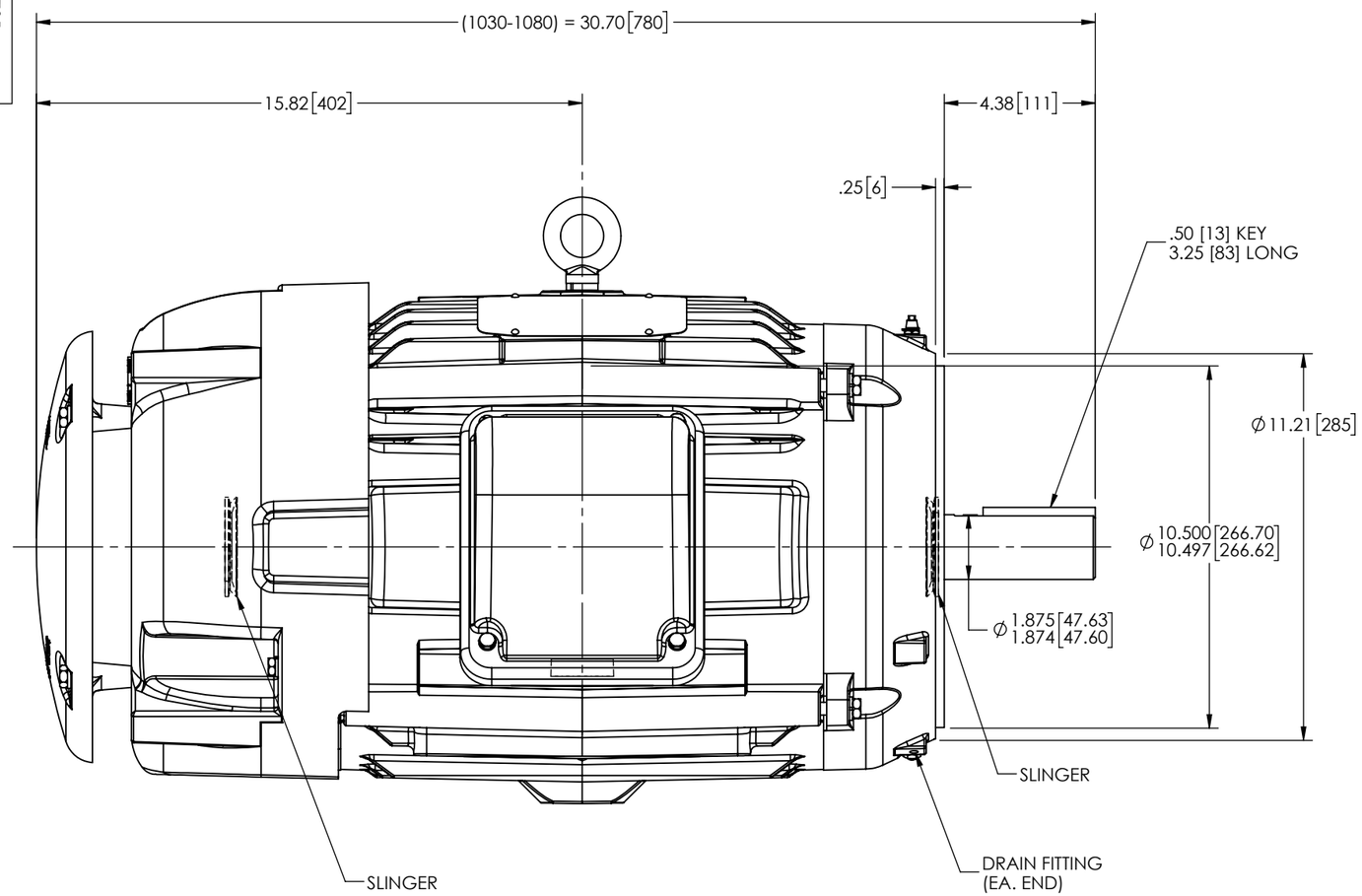

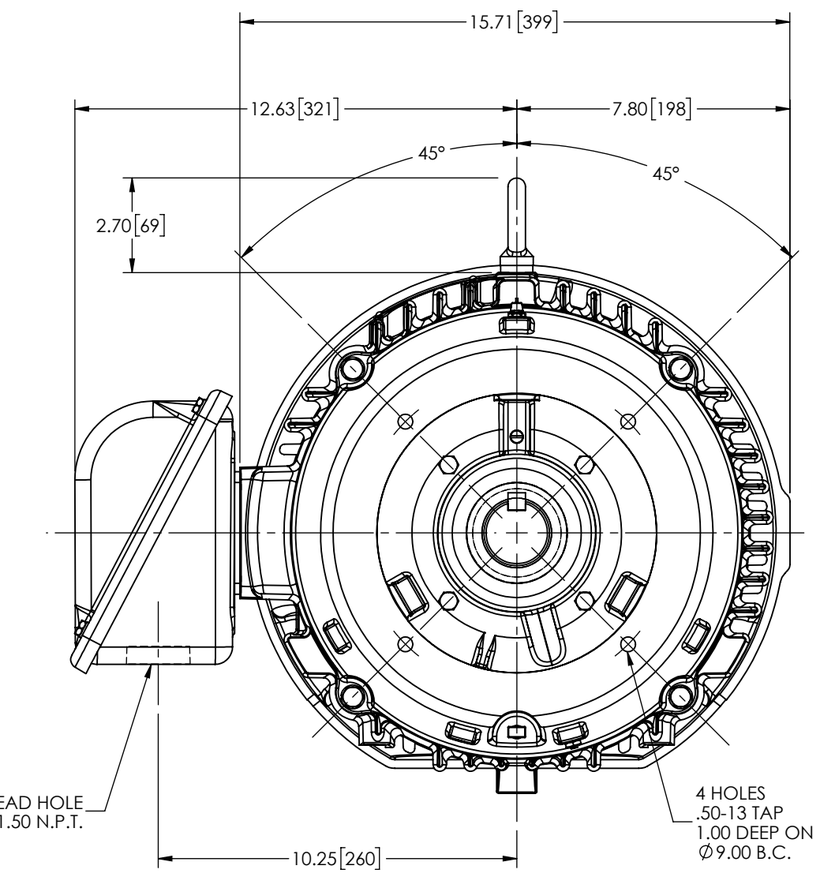

CUSTOMER IS RESPONSIBLE FOR DETERMINING THAT BALDOR'S PRODUCT WILL PERFORM SUITABLY IN THE INTENDED APPLICATION

REV. DESC: UPDATE NP GRAPHICS TO MATCH NP USED ON CAT SPECS			
REV: H	VERSION: 08	REVISED: 11:03:16 11/02/2022	TDR: 000001194199
MODEL NO. 10LYH462			REF: -
BY: USBUFRA			B

BALDOR

VERT TEFC 284-6TC ECP W/311 BRGS, PLS, DRIP COVER

10LYH462