07LYK370

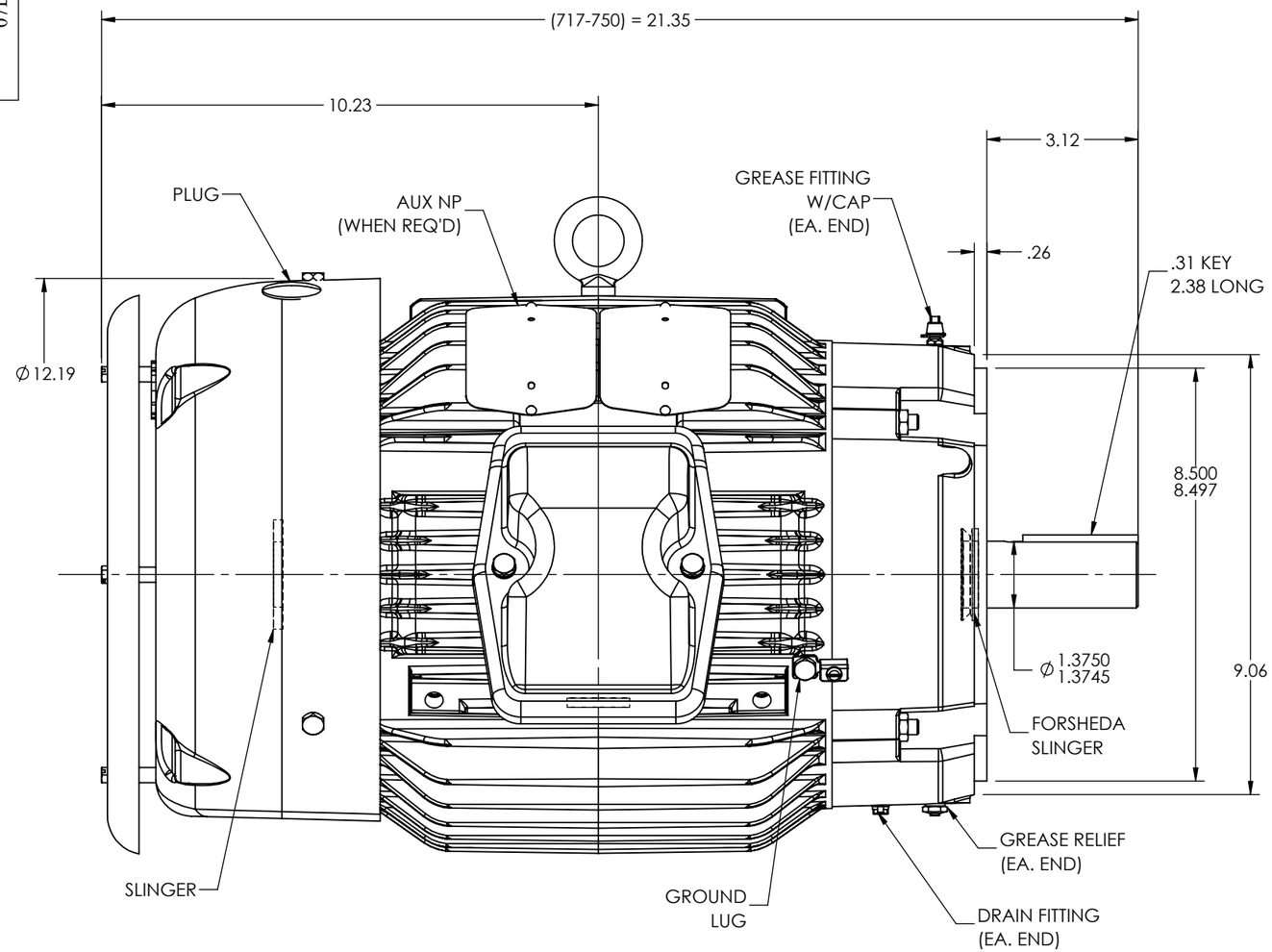

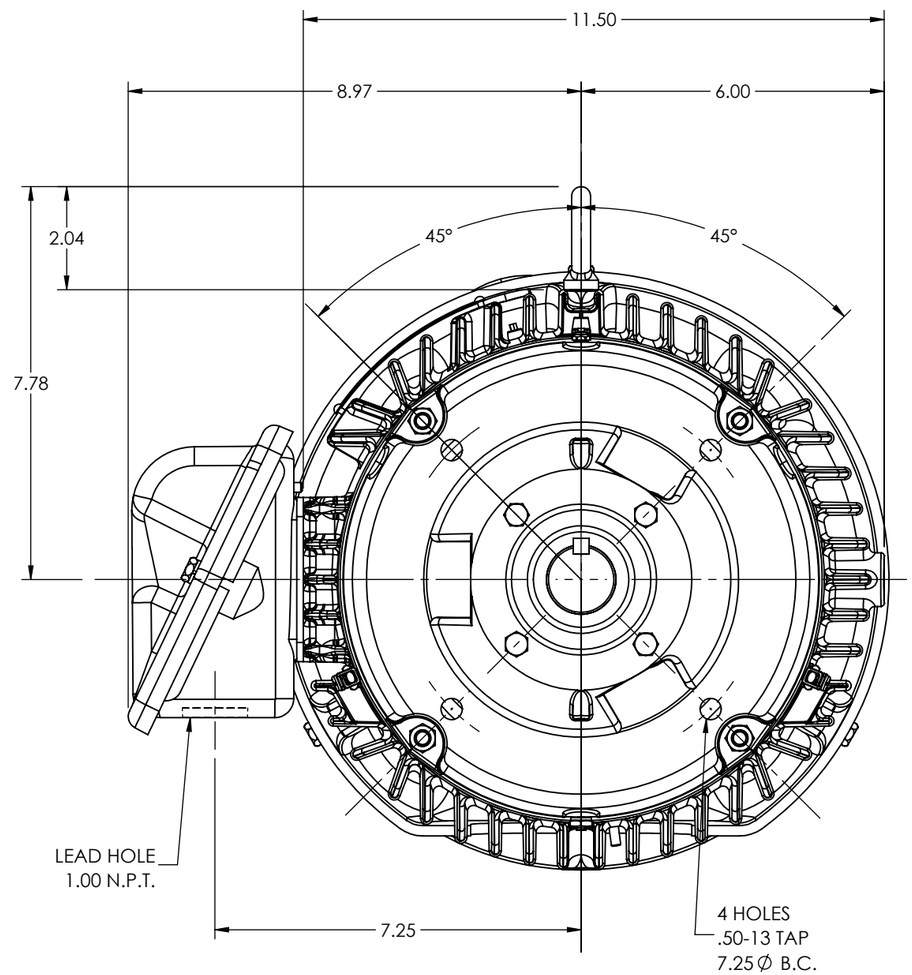

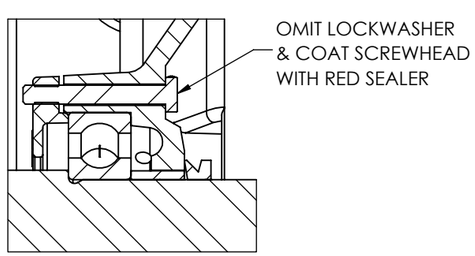

DRIVE END DETAIL

CUSTOMER IS RESPONSIBLE FOR DETERMINING THAT THE PRODUCT WILL PERFORM SUITABLY IN THE INTENDED APPLICATION

REV. DESC: CONVERT FROM AUTOCAD TO SWD			
REV: F	VERSION: 06	REVISED: 10:29:47 10/20/2023	TDR: 000001218940
MODEL NO. 07LYK370			REF: -
BY: USALMAZ			B

BALDOR - RELIANCE®

STD VERT 213-5TC TEFC M CP W/6307 BRGS, LIPPED LID, DRIP CVR

07LYK370