37LYM909

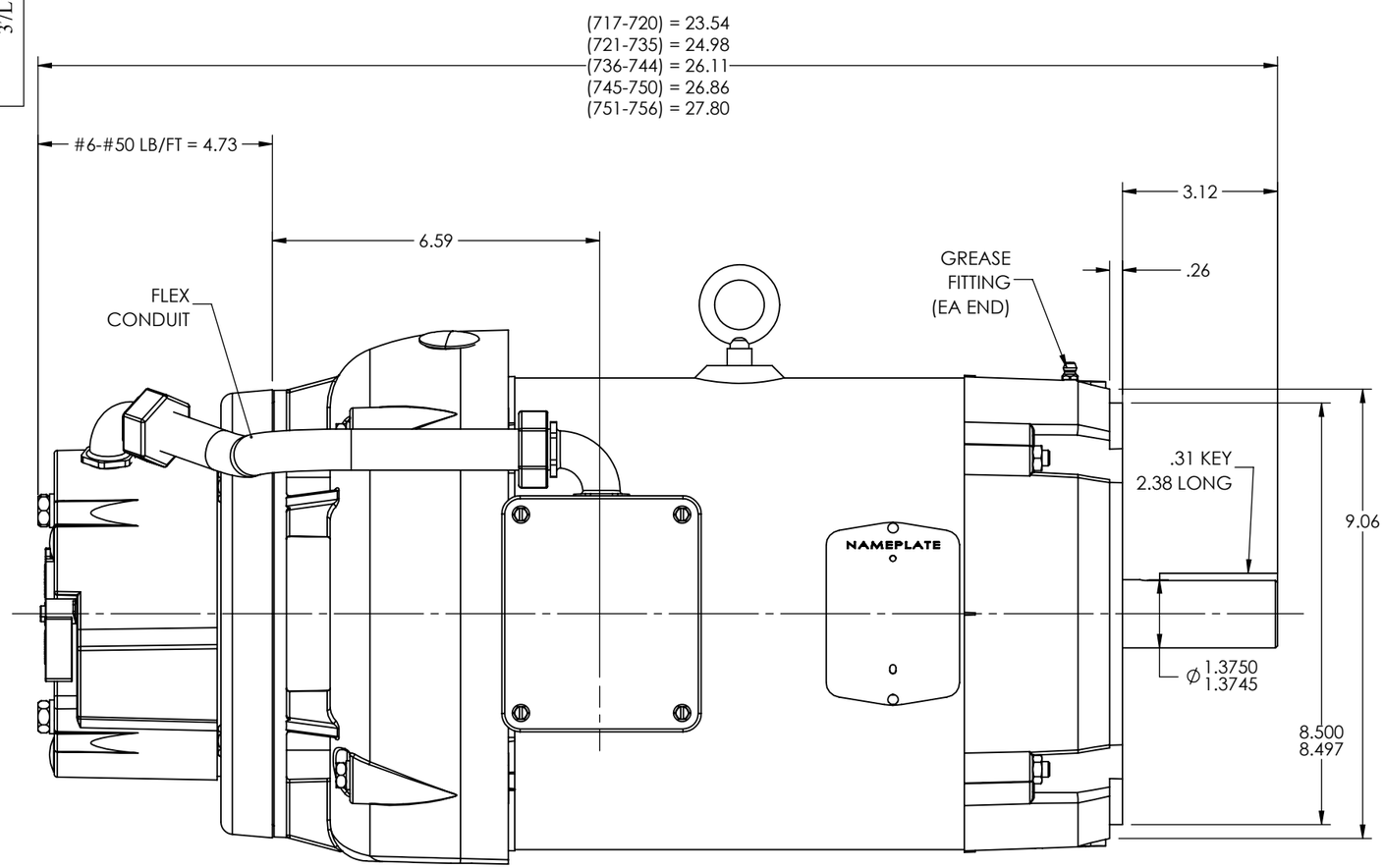

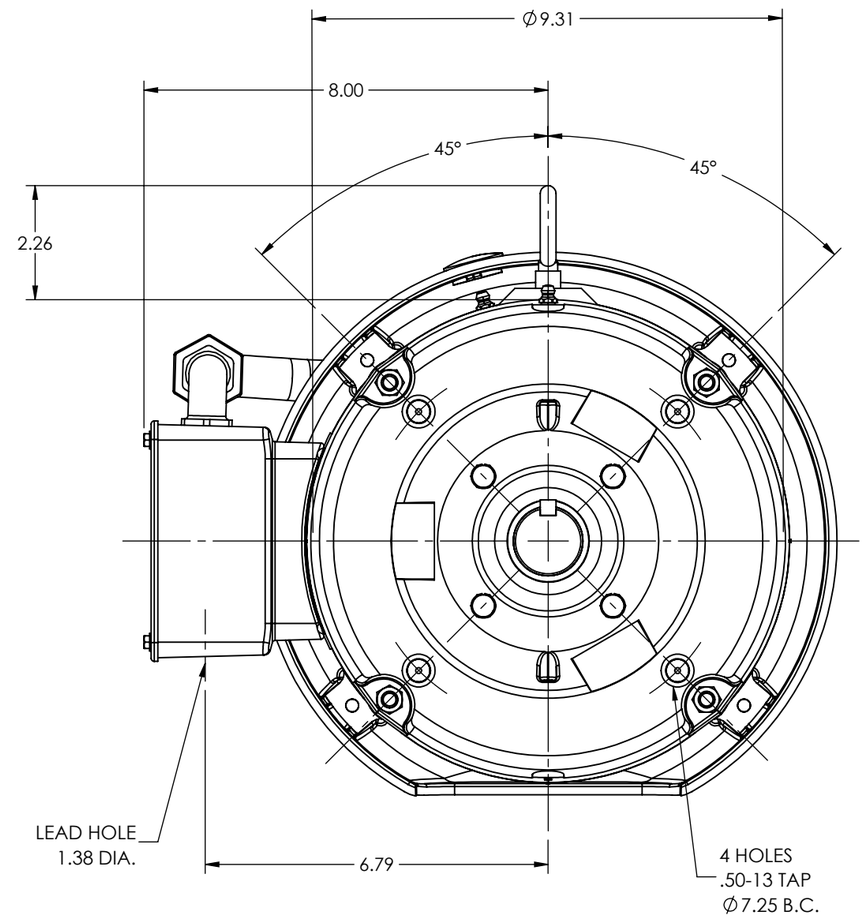

CUSTOMER IS RESPONSIBLE FOR DETERMINING THAT THE PRODUCT WILL PERFORM SUITABLY IN THE INTENDED APPLICATION

REV. DESC: CONVERT AUTOCAD DRW TO SWD DRW			
REV: A	VERSION: 01	REVISED: 01:05:29 10/19/2022	TDR: 000001198704
MODEL NO. 37LYM909			REF: -
BY: ENALEM0			B

BALDOR - RELIANCE®

VER 213-5TC TEFC 37M, C-FACE FH, DODGE 'D' BRAKE, EPACT

37LYM909