066930-702

DUTY MASTER ALTERNATING CURRENT MOTOR

SQUIRREL–CAGE INDUCTION
ENCLOSURE: TOTALLY ENCLOSED

SUBMERSIBLE

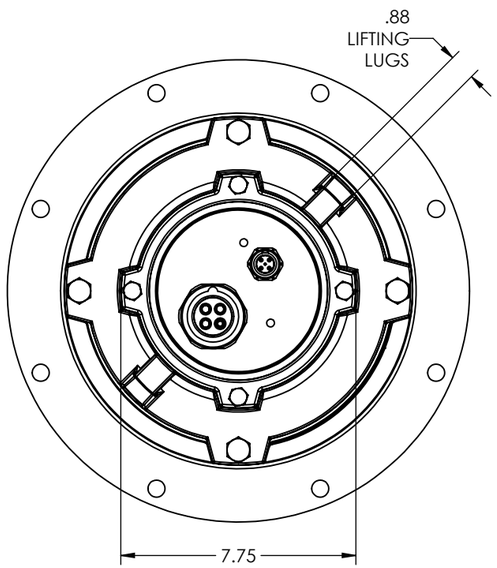

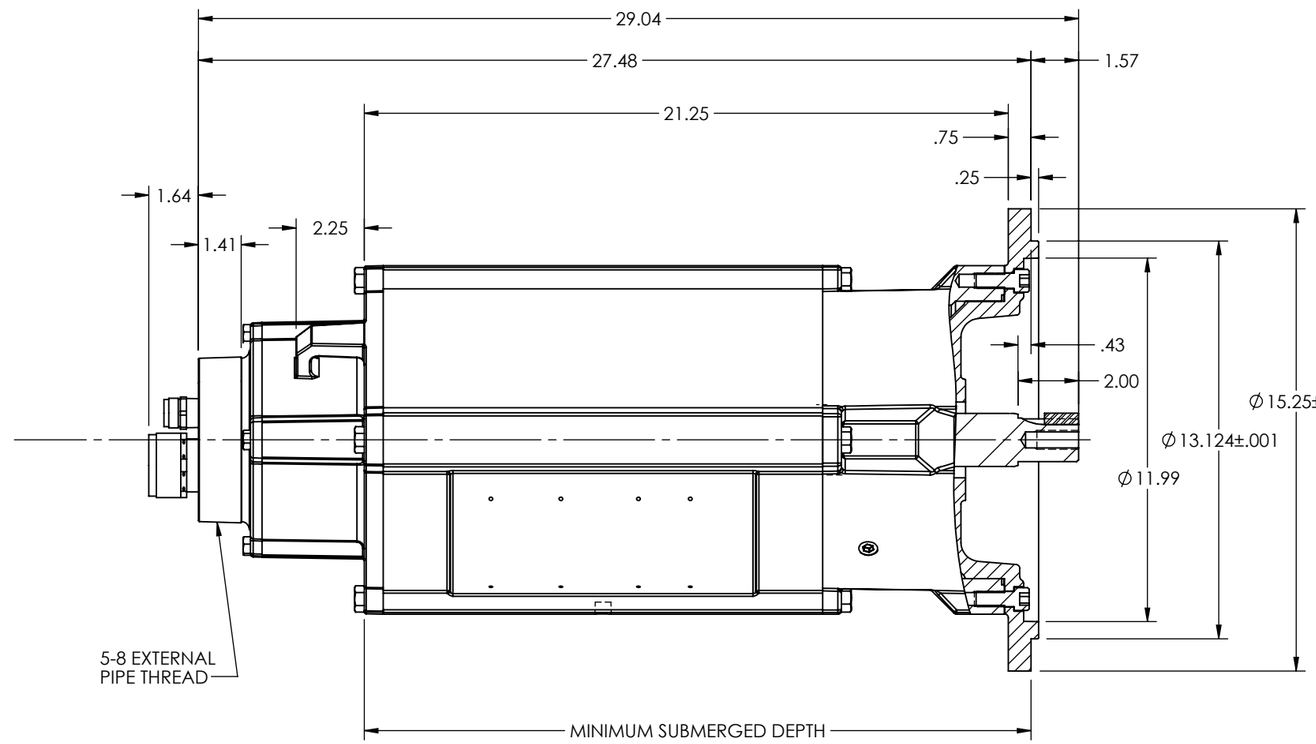

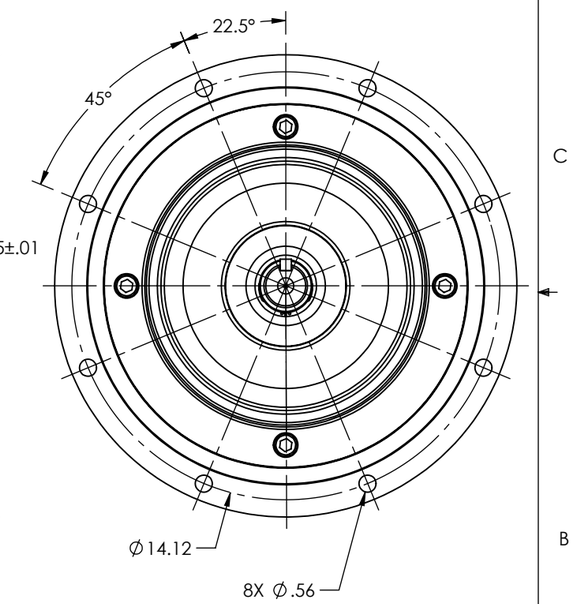

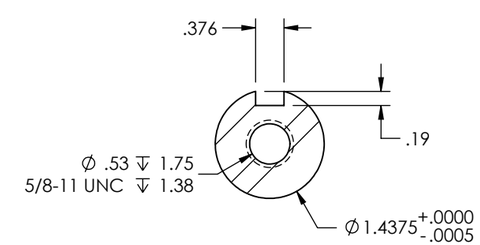

NOTES:

1. FACE RUNOUT AND ECCENTRICITY .008 MAX T.I.R.
2. PROTECTIVE CONDUIT FURNISHED BY CUSTOMER
3. WEIGHT (LBS.): 315 ± 15%
4. PROVIDED WITH CABLE CONNECTOR TO LENGTH OF CABLE AS REQUESTED BY CUSTOMER.

CUSTOMER IS RESPONSIBLE FOR DETERMINING THAT THE PRODUCT WILL PERFORM SUITABLY IN THE INTENDED APPLICATION

REV. DESC: CHANGE TO LAB OFFICE 018			
REV: A	VERSION: 01	REVISED: 11:59:26 09/11/2020	TDR: 000001144556
MODEL NO. 066930-702			REF: -
BY: USWATUR			B

BALDOR - RELIANCE®

DIM SHT 210TY STANDARD MOUNT WITH CABLE CONNECTORS

066930-702