ABB BALDOR RELIANCE

Customer information packet

SPM3537

.5HP, 3450RPM, 3PH, 60HZ, 56H, 3420M, TEFC, F1
Class - None
Division - Not Applicable

Copyright © All product information within this document is subject to ABB Motors and Mechanical Inc. copyright © protection, unless otherwise noted.
11/23/2026 3:25:45 AM

Specifications

Enclosure	TEFC
Frame	56H
Frame Material	Steel
Frequency	60.00 Hz
Haz Area Class and Group	None
Haz Area Division	Not Applicable
Motor Letter Type	Three Phase
Output @ Frequency	.500 HP @ 60 HZ
Phase	3
Synchronous Speed @ Frequency	3600 RPM @ 60 HZ
Voltage @ Frequency	230.0 V @ 60 HZ
	460.0 V @ 60 HZ
Agency Approvals	C UR US
	WEEE
Ambient Temperature	40 °C
Auxiliary Box	NO AUXILLARY BOX
Auxiliary Box Lead Termination	None
Base Indicator	Rigid
Bearing Grease Type	Polyrex EM (-20F +300F)
Blower	None
Current @ Voltage	.800 A @ 460.0 V
	1.600 A @ 230.0 V
	1.800 A @ 208.0 V
Design Code	B
Drip Cover	No Drip Cover
Duty Rating	CONT
Efficiency @ 100% Load	77.0 %
Electrically Isolated Bearing	Not Electrically Isolated
Feedback Device	NO FEEDBACK
Front Shaft Indicator	None
Heater Indicator	No Heater
High Voltage Full Load Amps	0.8 a

Part Detail

Revision	B
Type	AC
Mech. spec.	34T120
Base	
Status	PRD/A
Elec. spec.	34WG3229
Layout	34LYT120
Eff. date	10-29-2024
CD Diagram	CD0005
Poles	02
Leads	9#18
Proprietary	False
Created date	09-12-2023

Insulation Class	F
Inverter Code	Not Inverter
KVA Code	N
Lifting Lugs	No Lifting Lugs
Locked Bearing Indicator	No Locked Bearing
Motor Lead Quantity/Wire Size	9 @ 18 AWG
Motor Lead Termination	Flying Leads
Motor Standards	NEMA
Motor Type	3420M
Mounting Arrangement	F1
Number of Poles	2
Overall Length	12.84 IN
Power Factor	74
Product Family	General Purpose
Pulley End Bearing Type	Ball
Pulley Face Code	Standard
Pulley Shaft Indicator	Standard
Rodent Screen	None
Service Factor	1.25
Shaft Diameter	0.625 IN
Shaft Ground Indicator	No Shaft Grounding
Shaft Rotation	Reversible
Shaft Slinger Indicator	No Slinger
Speed	3450 rpm
Speed Code	Single Speed
Starting Method	Direct on line
Thermal Device - Bearing	None
Thermal Device - Winding	None
Vibration Sensor Indicator	No Vibration Sensor
Winding Thermal 1	None
Winding Thermal 2	None

Nameplate

NP4558A02LL										
CAT #	SPM3537			**WGT**	27	**LBS**				
SER #					**ENCL**	TEFC				
SPEC	34T120-3229				**CC**		**IP**	54		
HP	.5						**NEMA NOM. EFF**		77	
VOLTS	230/460				**PF**	74				
AMPS	1.6/.8									
RATING	40C AMB-CONT									
RPM	3450				**PH**	3	**DES**	B		
FRAME	56H	**HZ**	60		**CODE**	N	**CLASS**	F		
SER.F.	1.25	**SF AMP**	1.8/.9							
DE	6203		**ODE**	6203						
GREASE	POLYREX EM									
						QR				
YR										

AC Induction Motor Performance Data
Record # 100840
Typical performance - not guaranteed values

Winding: 34WG3229-R019	**Type:** 3420M	**Enclosure:** TEFC

Nameplate Data				**460 V, 60 Hz: High Voltage Connection**	
Rated Output (HP)			.5	**Full Load Torque**	0.75 LB-FT
Volts			230/460	**Start Configuration**	direct on line
Full Load Amps			1.6/.8	**Breakdown Torque**	4.7 LB-FT
R.P.M.			3450	**Pull-up Torque**	4 LB-FT
Hz	60	**Phase**	3	**Locked-rotor Torque**	4.4 LB-FT
NEMA Design Code	B	**KVA Code**	N	**Starting Current**	7.4 A
Service Factor (S.F.)			1.25	**No-load Current**	0.49 A
NEMA Nom. Eff.	77	**Power Factor**	74	**Line-line Res. @ 25ºC**	20.7 Ω
Rating - Duty			40C AMB-CONT	**Temp. Rise @ Rated Load**	48°C
S.F. Amps			1.8/.9	**Temp. Rise @ S.F. Load**	57°C
				Locked-rotor Power Factor	65.6
				Rotor inertia	0.0186 lb-ft²

Load Characteristics 460 V, 60 Hz, 0.5 HP

% of Rated Load	**25**	**50**	**75**	**100**	**125**	**150**	**S.F.**
Power Factor	41	58	69	76	81	84	81
Efficiency	56.5	70.7	76.6	79.5	80.8	81.2	80.8
Speed	3568	3544	3519	3493	3466	3437	3466
Line amperes	0.52	0.58	0.67	0.77	0.88	1.01	0.88

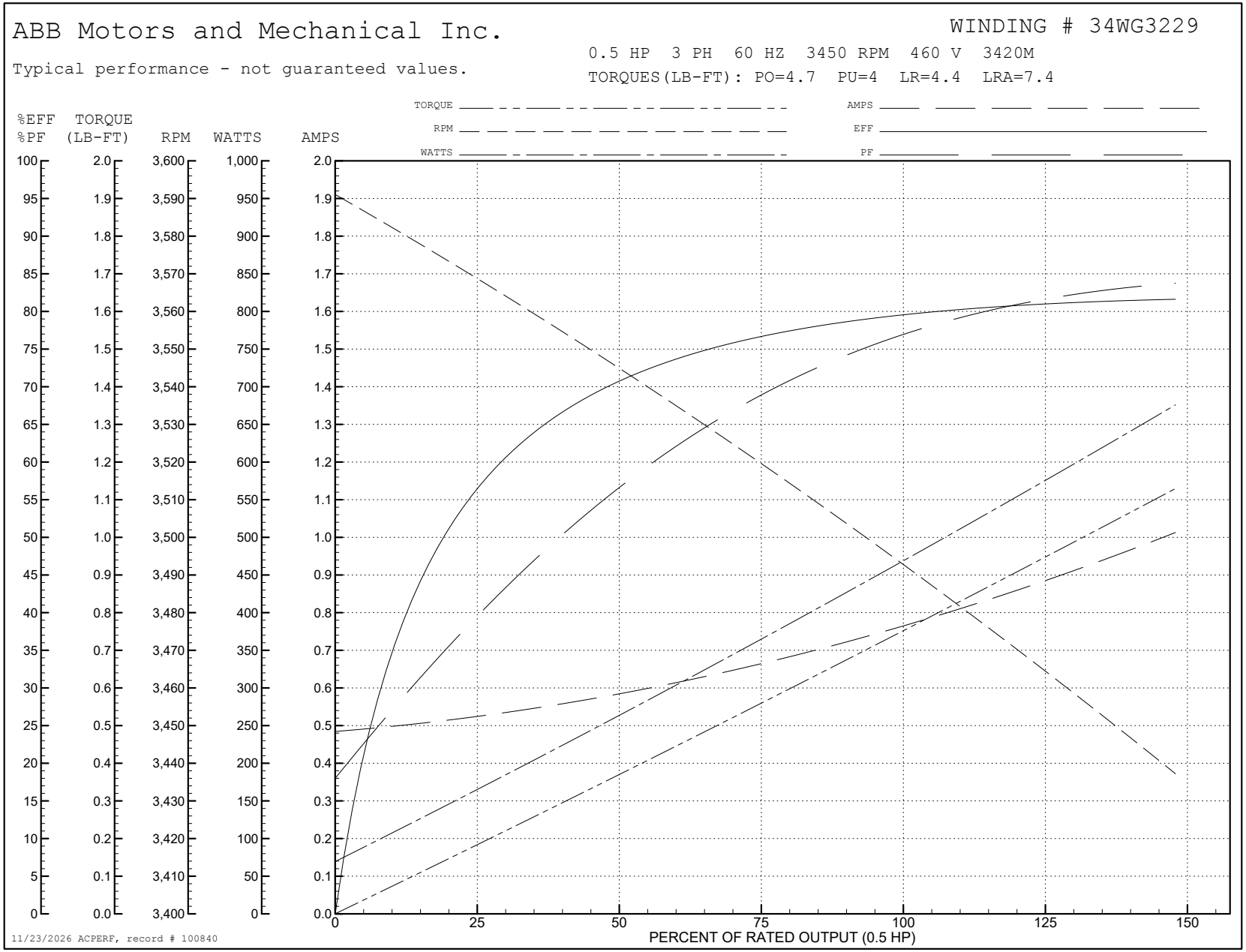
ABB Motors and Mechanical Inc.
WINDING # 34WG3229
0.5 HP 3 PH 60 HZ 3450 RPM 460 V 3420M
Typical performance - not guaranteed values.
TORQUES(LB-FT): PO=4.7 PU=4 LR=4.4 LRA=7.4
TORQUE
RPM
WATTS
AMPS
EFF
PF
%EFF %PF
TORQUE (LB-FT)
RPM
WATTS
AMPS
PERCENT OF RATED OUTPUT (0.5 HP)
11/23/2026 ACPERF, record # 100840

34LYT120

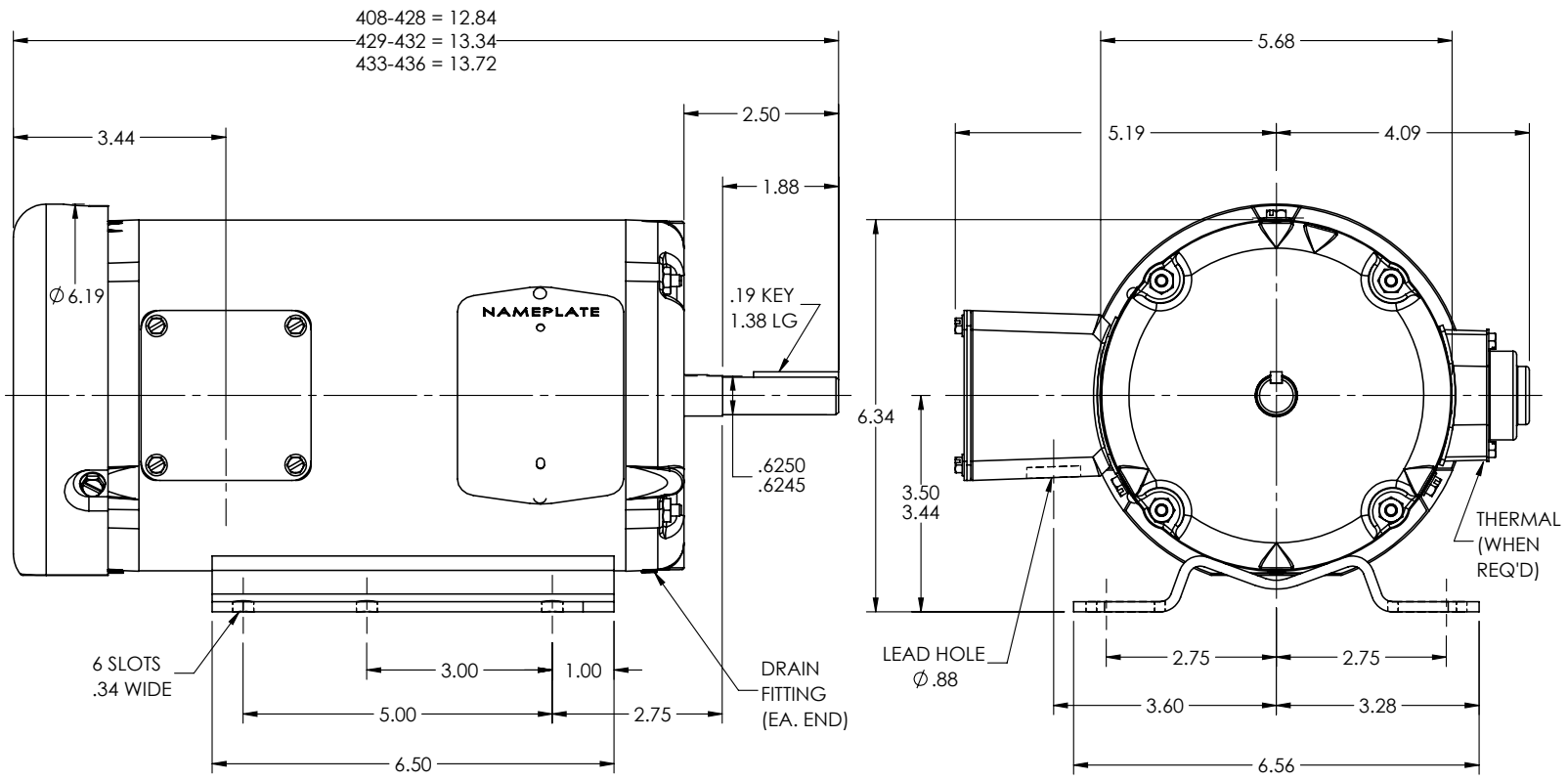

CUSTOMER IS RESPONSIBLE FOR DETERMINING THAT THE PRODUCT WILL PERFORM SUITABLY IN THE INTENDED APPLICATION

REV. DESC: NEW			
REV: -	VERSION: 00	REVISED: 01:59:40 09/11/2023	TDR: 000001213518
34LYT120	MODEL NO. 34LYT120		REF: -
	BY: USALMAZ		

BALDOR - RELIANCE®

STD HORZ 34M NEMA 56/56H TEFC W/DRAINS (IP54)

34LYT120

CD0005

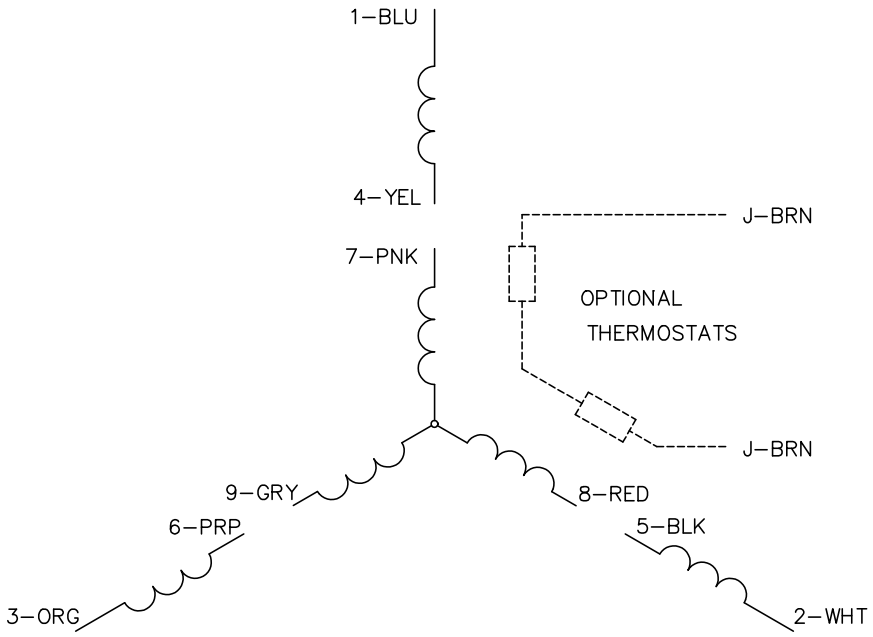

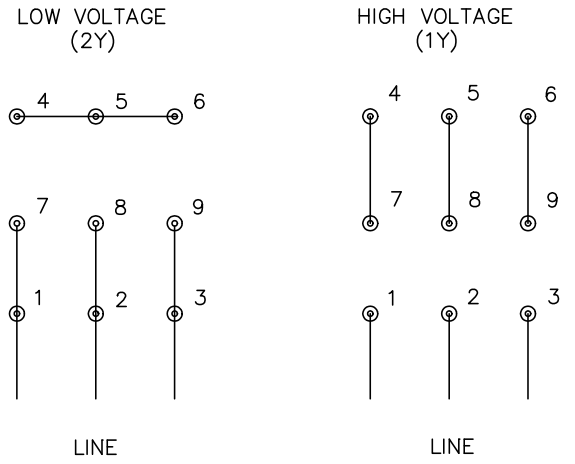

NOTES:

1. INTERCHANGE ANY TWO LINE LEADS TO REVERSE ROTATION.
2. OPTIONAL THERMOSTATS ARE PROVIDED WHEN SPECIFIED.
3. ACTUAL NUMBER OF INTERNAL PARALLEL CIRCUITS MAY BE A MULTIPLE OF THOSE SHOWN ABOVE.
4. LEAD COLORS ARE OPTIONAL. LEADS MUST ALWAYS BE NUMBERED AS SHOWN.

CD0005

REV. DESC: REVISE TO SHOW OPTIONAL COLORS			BALDOR ELECTRIC Co.
REV. LTR: E	BY: JLP	REVISED: 01/19/99 10:15	TDR: 0171435
CD0005		FILE: AAA00005140	MDL: –
		MTL: –	3PH, DV, 9 LEADS