37LYT645

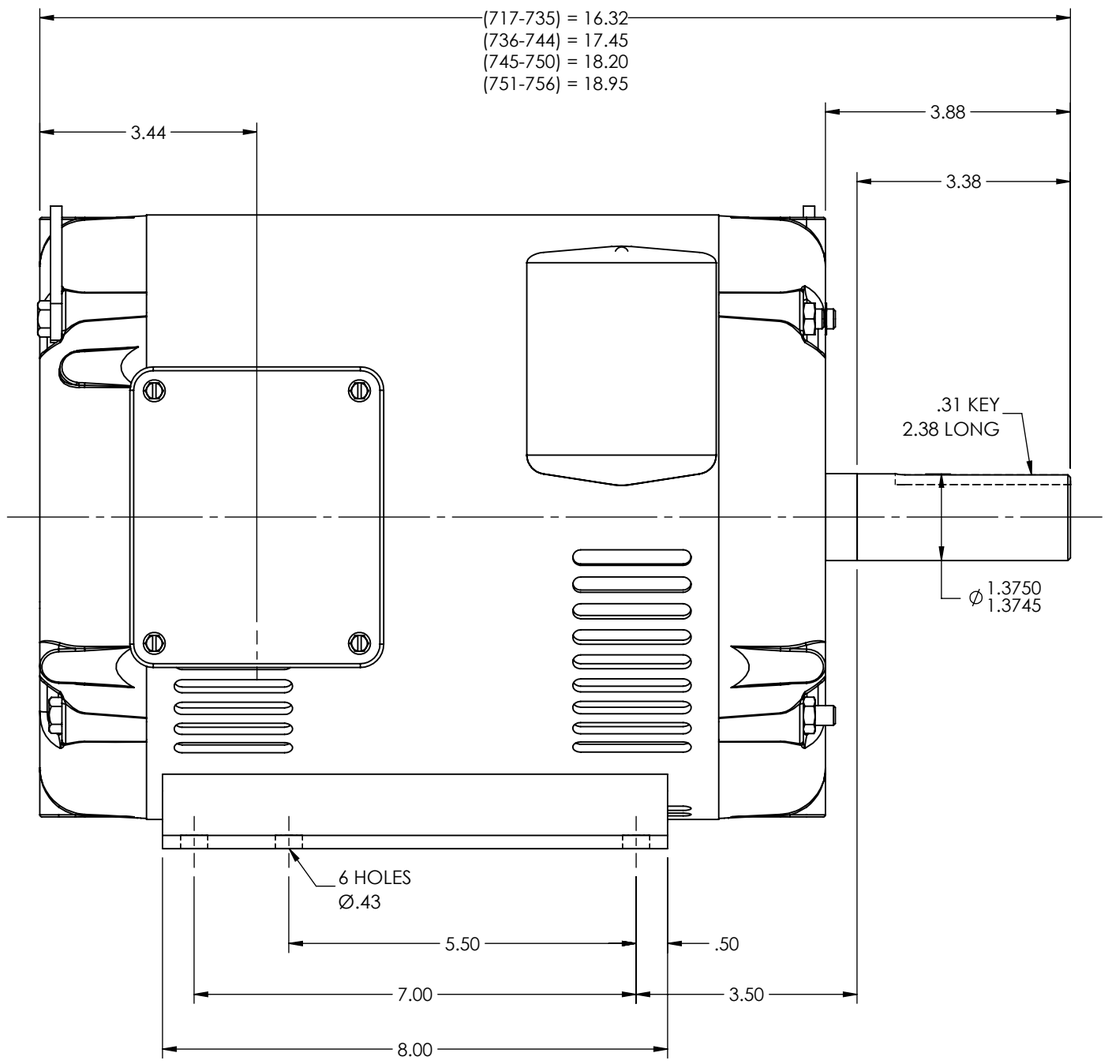

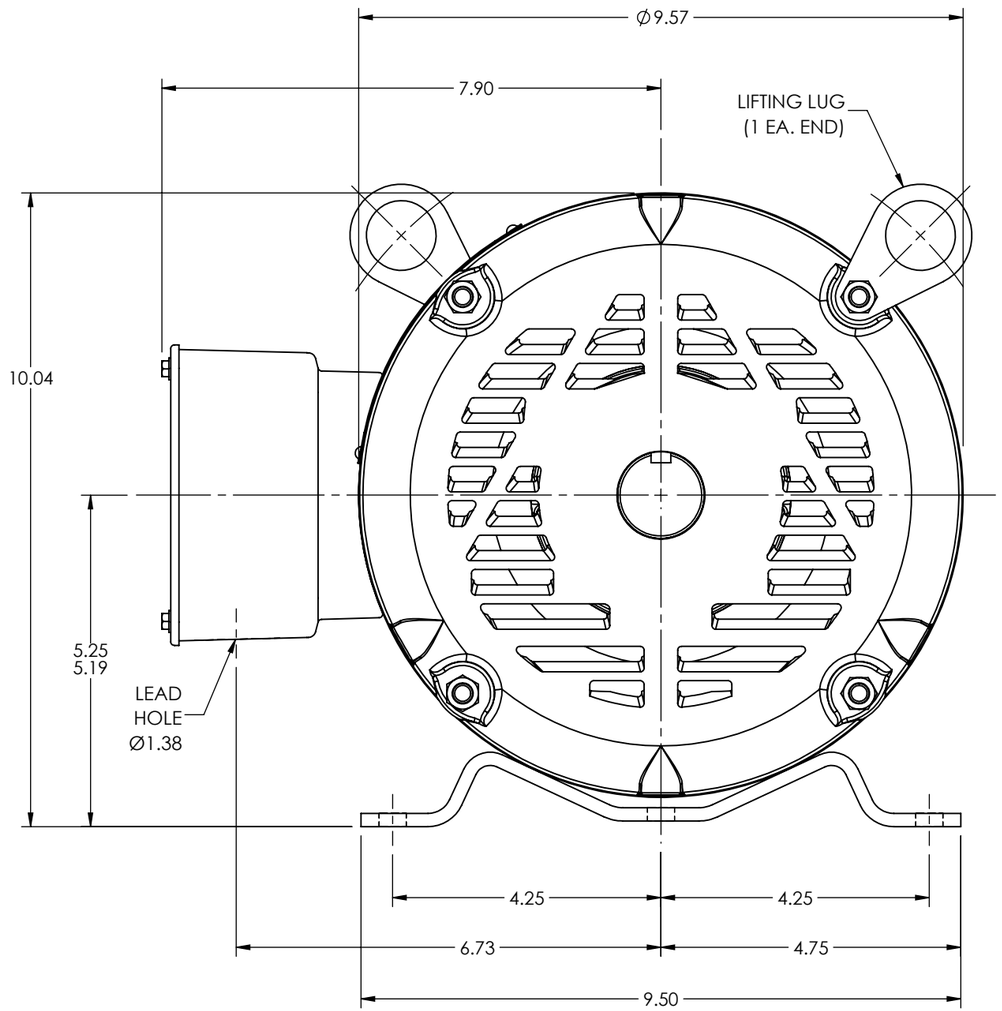

CUSTOMER IS RESPONSIBLE FOR DETERMINING THAT THE PRODUCT WILL PERFORM SUITABLY IN THE INTENDED APPLICATION

REV. DESC: NEW			
REV: -	VERSION: 00	REVISED: 01:14:12 08/28/2023	TDR: 000001213521
MODEL NO. 37LYT645			REF: -
BY: USALMAZ			B

BALDOR - RELIANCE®

HORZ 213-5T OPSB 37M, MOD NP

37LYT645