ABB BALDOR RELIANCE

Customer information packet

PL3515M

2HP, 3450RPM, 1PH, 60HZ, 56, 3524LC, TEFC, F1
Class - None
Division - Not Applicable

Copyright © All product information within this document is subject to ABB Motors and Mechanical Inc. copyright © protection, unless otherwise noted.
11/22/2026 9:37:49 PM

Specifications

Enclosure	TEFC
Frame	56
Frame Material	Steel
Frequency	60.00 Hz
Haz Area Class and Group	None
Haz Area Division	Not Applicable
Motor Letter Type	Cap Start, Cap Run
Output @ Frequency	2.000 HP @ 60 HZ
Phase	1
Synchronous Speed @ Frequency	3600 RPM @ 60 HZ
Voltage @ Frequency	230.0 V @ 60 HZ
	115.0 V @ 60 HZ
Agency Approvals	CSA
	UR
Ambient Temperature	40 °C
Auxiliary Box	NO AUXILLARY BOX
Auxiliary Box Lead Termination	None
Base Indicator	Rigid
Bearing Grease Type	Polyrex EM (-20F +300F)
Blower	None
Current @ Voltage	8.800 A @ 230.0 V
	17.600 A @ 115.0 V
Design Code	L
Drip Cover	No Drip Cover
Duty Rating	CONT
Efficiency @ 100% Load	77.0 %
Electrically Isolated Bearing	Not Electrically Isolated
Feedback Device	NO FEEDBACK
Front Face Code	Standard
Front Shaft Indicator	None
Heater Indicator	No Heater
High Voltage Full Load Amps	8.8 a

Part Detail

Revision	AD
Type	AC
Mech. spec.	35T962
Base	
Status	PRD/A
Elec. spec.	35WGY691
Layout	35LYT962
Eff. date	05-07-2024
CD Diagram	CD0320
Poles	02
Leads	4#14 A&J,2#18 B PH,1#12 4-YEL
Proprietary	False
Created date	06-22-2007

Insulation Class	F
Inverter Code	Not Inverter
KVA Code	F
Lifting Lugs	No Lifting Lugs
Locked Bearing Indicator	No Locked Bearing
Motor Lead Exit	Ko Box
Motor Lead Quantity/Wire Size	4 @ 16 AWG, A&J
Motor Lead Termination	Flying Leads
Motor Standards	NEMA
Motor Type	3524LC
Mounting Arrangement	F1
Number of Poles	2
Overall Length	13.25 IN
Power Factor	95
Product Family	General Purpose
Pulley End Bearing Type	Ball
Pulley Face Code	Standard
Pulley Shaft Indicator	Standard
Rodent Screen	None
RoHS Status	ROHS COMPLIANT
Service Factor	1.15
Shaft Diameter	0.625 IN
Shaft Extension Location	Pulley End
Shaft Ground Indicator	No Shaft Grounding
Shaft Rotation	Reversible
Shaft Slinger Indicator	No Slinger
Speed	3450 rpm
Speed Code	Single Speed
Starting Method	Direct on line
Thermal Device - Bearing	None
Thermal Device - Winding	Do Not Use
Vibration Sensor Indicator	No Vibration Sensor
Winding Thermal 1	Manual Thermal Overload
Winding Thermal 1 Location	KO

Winding Thermal 2	None

Nameplate

NP1257L									
CAT.NO.	PL3515M								
SPEC.	35T962Y691								
HP	2								
VOLTS	115/230								
AMP	17.6/8.8								
RPM	3450								
FRAME	56		**HZ**	60		**PH**	1		
SER.F.	1.15	**CODE**	F	**DES**	L	**CL**	F		
NEMA-NOM-EFF	77	**PF**	95						
RATING	40C AMB-CONT								
CC									
DE	6205	**ODE**	6203						
ENCL	TEFC	**SN**							

Accessories

Part number	Description	Multiplier
35-8762	C FACE KIT	A8
35EP1506A01SP	D-FLANGE KIT	A8

AC Induction Motor Performance Data
Record # 10291
Typical performance - not guaranteed values

Winding: 35WGY691-R001	**Type:** 3524LC	**Enclosure:** TEFC

Nameplate Data				**230 V, 60 Hz: High Voltage Connection**	
Rated Output (HP)			2	**Full Load Torque**	3 LB-FT
Volts			115/230	**Start Configuration**	direct on line
Full Load Amps			17.6/8.8	**Breakdown Torque**	6 LB-FT
R.P.M.			3450	**Pull-up Torque**	5 LB-FT
Hz	60	**Phase**	1	**Locked-rotor Torque**	7 LB-FT
NEMA Design Code	L	**KVA Code**	F	**Starting Current**	48 A
Service Factor (S.F.)			1.15	**No-load Current**	1.35 A
NEMA Nom. Eff.	77	**Power Factor**	95	**Line-line Res. @ 25ºC**	1.33 Ω A Ph 1.27 Ω B Ph
Rating - Duty			40C AMB-CONT	**Temp. Rise @ Rated Load**	66°C
S.F. Amps				**Temp. Rise @ S.F. Load**	88°C

Load Characteristics 230 V, 60 Hz, 2 HP

% of Rated Load	**25**	**50**	**75**	**100**	**125**	**150**	**S.F.**
Power Factor	93	93	96	95	95	93	95
Efficiency	57	72	76	77	72.5	73	74.3
Speed	3560	3539	3508	3473	3431	3380	3448
Line amperes	3.1	4.9	6.7	8.8	11.6	13.8	10.5

ABB Motors and Mechanical Inc.

WINDING # 35WGY691

2 HP 1 PH 60 HZ 3450 RPM 230 V 3524LC

Typical performance - not guaranteed values.

TORQUES(LB-FT): PO=6 PU=5 LR=7 LRA=48

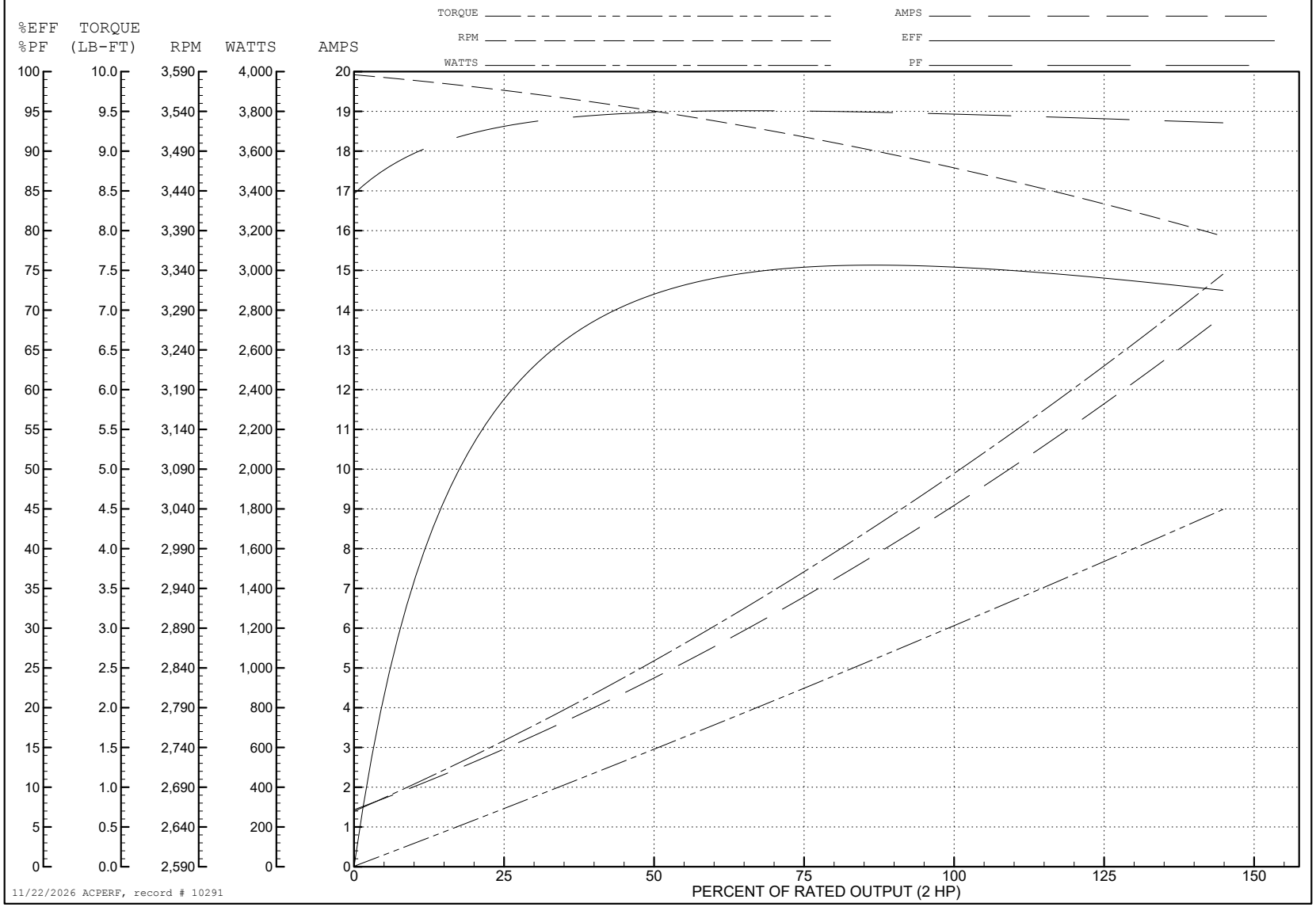

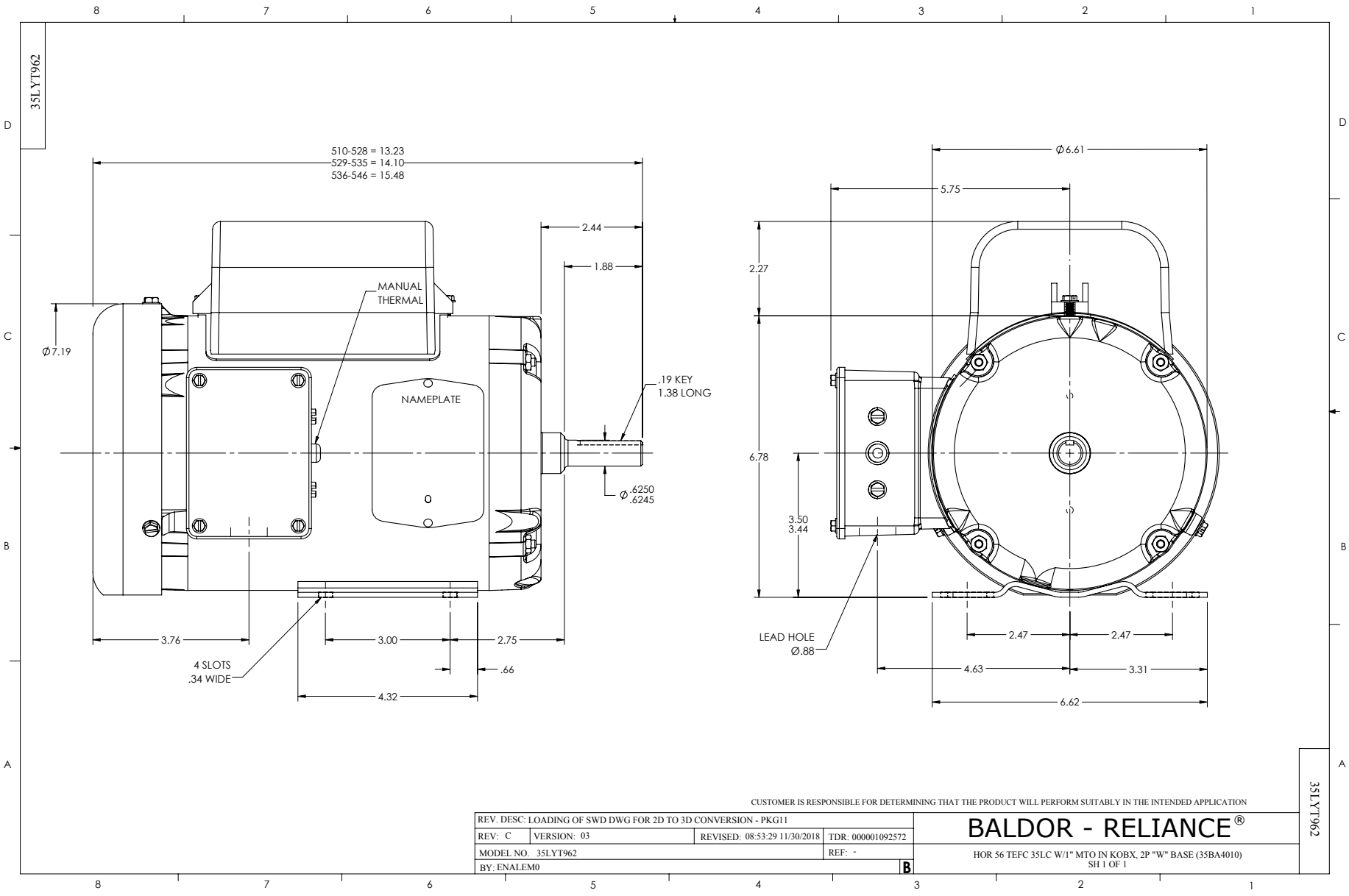
35LYT962
510-528 = 13.23
529-535 = 14.10
536-546 = 15.48
2.44
1.88
MANUAL
THERMAL
Ø7.19
NAMEPLATE
.19 KEY
1.38 LONG
Ø .6250
.6245
3.76
3.00
2.75
.66
4.32
4 SLOTS
.34 WIDE
Ø6.61
5.75
2.27
6.78
3.50
3.44
LEAD HOLE
Ø.88
2.47
2.47
4.63
3.31
6.62
CUSTOMER IS RESPONSIBLE FOR DETERMINING THAT THE PRODUCT WILL PERFORM SUITABLY IN THE INTENDED APPLICATION
REV. DESC: LOADING OF SWD DWG FOR 2D TO 3D CONVERSION - PKG11
REV: C
VERSION: 03
REVISED: 08:53:29 11/30/2018
TDR: 000001092572
MODEL NO. 35LYT962
REF: -
BY: ENALEM0
B
BALDOR - RELIANCE®
HOR 56 TEFC 35LC W/1" MTO IN KOBX, 2P "W" BASE (35BA4010)
SH 1 OF 1
35LYT962

CD0320

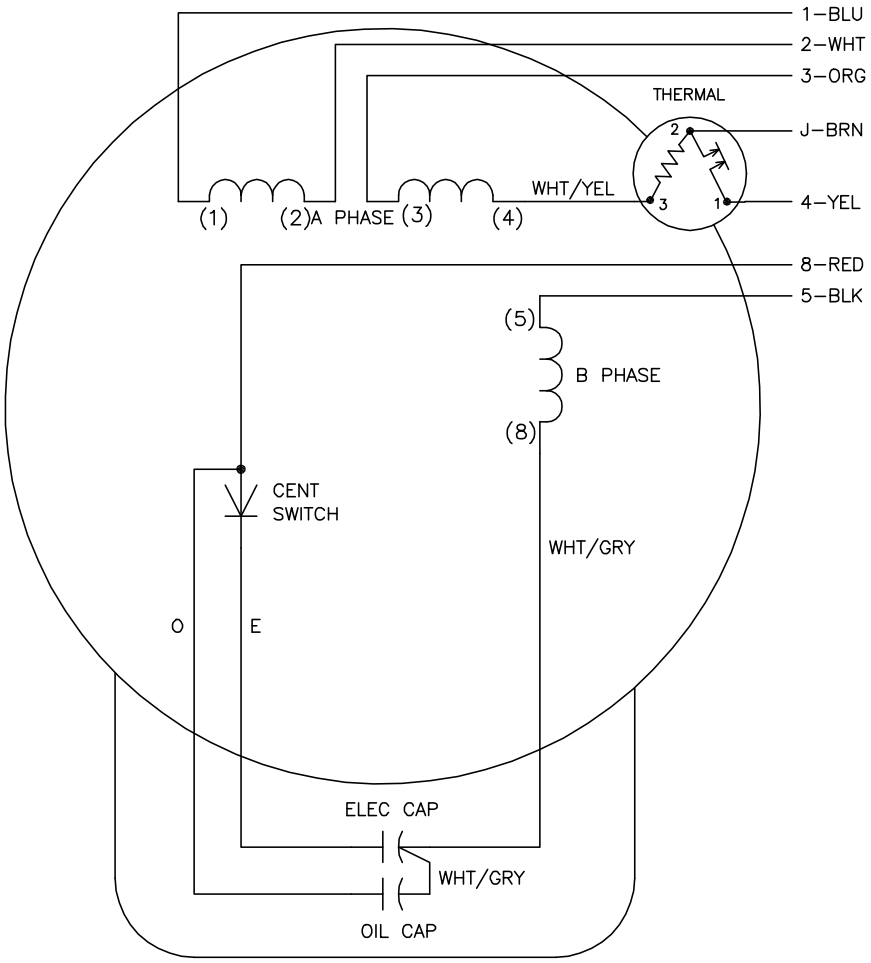

	LINE A	LINE B	JOIN	JOIN
HIGH STD	1,8	4	2,3,5	J
HIGH OPP	1,5	4	2,3,8	J
LOW STD	1,3,8	4	–	2,J,5
LOW OPP	1,3,5	4	–	2,J,8

NOTES:

1. STANDARD ROTATION IS CCW FACING END OPPOSITE SHAFT EXTENSION.
2. MULTIPLE CAPACITORS ARE CONNECTED IN PARALLEL UNLESS OTHERWISE SPECIFIED.
3. LEAD COLORS ARE OPTIONAL. LEADS MUST ALWAYS BE NUMBERED AS SHOWN.

CD0320

REV. DESC: ADD INTERNAL CONNECTION TO HELP MANUFACTURING		
REV. LTR: G	VERSION: 01	TDR: 000000941594
FILE: \AAA\00007\422	REVISED: 02:21:00 08/28/2015	BY: ENALEMO
MTL: –		

BALDOR

TYPE LC, DV, REV, THERMAL, B PH AMPS THRU HTR HVC, 7 LEAD

SH 1 of 1