ABB BALDOR RELIANCE

Customer information packet

MM3545

.75KW, 3450RPM, 3PH, 60HZ, D80, 3416M, TEFC, F2
Class - None
Division - Not Applicable

Copyright © All product information within this document is subject to ABB Motors and Mechanical Inc. copyright © protection, unless otherwise noted.
11/28/2026 12:18:11 PM

Specifications

Enclosure	TEFC
Frame	D80
Frame Material	Steel
Frequency	60.00 Hz
Haz Area Class and Group	None
Haz Area Division	Not Applicable
Motor Letter Type	Three Phase
Output @ Frequency	1.000 HP @ 60 HZ
Phase	3
Synchronous Speed @ Frequency	3600 RPM @ 60 HZ
Voltage @ Frequency	460.0 V @ 60 HZ
	230.0 V @ 60 HZ
	208.0 V @ 60 HZ
Agency Approvals	CSA
	UR
Ambient Temperature	40 °C
Auxiliary Box	NO AUXILLARY BOX
Auxiliary Box Lead Termination	None
Base Indicator	Rigid
Bearing Grease Type	Polyrex EM (-20F +300F)
Blower	None
Current @ Voltage	3.100 A @ 208.0 V
	3.000 A @ 230.0 V
	1.500 A @ 460.0 V
Design Code	B
Drip Cover	No Drip Cover
Duty Rating	CONT
Efficiency @ 100% Load	77.0 %
Electrically Isolated Bearing	Not Electrically Isolated
Feedback Device	NO FEEDBACK
Frame Prefix	D
Front Face Code	Standard

Part Detail

Revision	Y
Type	AC
Mech. spec.	34G167
Base	
Status	INA/A
Elec. spec.	34WGW317
Layout	34LYG167
Eff. date	03-09-2021
CD Diagram	CD0005
Poles	02
Leads	9#18
Proprietary	False
Created date	01-01-0001

Front Shaft Indicator	None
Heater Indicator	No Heater
High Voltage Full Load Amps	1.5 a
Insulation Class	B
Inverter Code	Not Inverter
KVA Code	K
Lifting Lugs	No Lifting Lugs
Locked Bearing Indicator	No Locked Bearing
Motor Lead Exit	Ko Box
Motor Lead Quantity/Wire Size	9 @ 18 AWG
Motor Lead Termination	Flying Leads
Motor Standards	IEC
Motor Type	3416M
Mounting Arrangement	B3
Number of Poles	2
Overall Length	10.73 IN
Power Factor	80
Product Family	General Purpose
Pulley End Bearing Type	Ball
Pulley Face Code	Standard
Pulley Shaft Indicator	Standard
Rodent Screen	None
Service Factor	1.00
Shaft Diameter	0.748 IN
Shaft Extension Location	Pulley End
Shaft Ground Indicator	No Shaft Grounding
Shaft Rotation	Reversible
Shaft Slinger Indicator	No Slinger
Speed	3450 rpm
Speed Code	Single Speed
Starting Method	Direct on line
Thermal Device - Bearing	None
Thermal Device - Winding	None
Vibration Sensor Indicator	No Vibration Sensor

Nameplate

NP1379L							
CAT.NO.							
SPEC.	34G167W317G1						
IEC FRAME	D80	**K.W.**	.75 TE				
VOLTS	208-230/460						
AMP	3.1-3/1.5						
RPM	3450	**I.P.**	54				
HZ	60	**PH**	3	**CL**	B		
SER.F.	1.00	**DES**	B	**CODE**	K		
NEMA-NOM-EFF	77	**PF**	80				
RATING	40C AMB-CONT						
CC	010A						
DE	6205	**ODE**	6203				
SER. #							

AC Induction Motor Performance Data
Record # 6953
Typical performance - not guaranteed values

Winding: 34WGW317-R001	**Type:** 3416M	**Enclosure:** TEFC

Nameplate Data			**460 V, 60 Hz: High Voltage Connection**	
Rated Output (HP)		1	**Full Load Torque**	1.5 LB-FT
Volts		208-230/460	**Start Configuration**	direct on line
Full Load Amps		3.1-3/1.5	**Breakdown Torque**	6 LB-FT
R.P.M.		3450	**Pull-up Torque**	4.5 LB-FT
Hz	60 **Phase**	3	**Locked-rotor Torque**	4.6 LB-FT
NEMA Design Code	B **KVA Code**	K	**Starting Current**	11.4 A
Service Factor (S.F.)		1	**No-load Current**	0.87 A
NEMA Nom. Eff.	77 **Power Factor**	80	**Line-line Res. @ 25ºC**	18 Ω
Rating - Duty		40C AMB-CONT	**Temp. Rise @ Rated Load**	54°C
			Locked-rotor Power Factor	67
			Rotor inertia	0.0148 LB-FT2

Load Characteristics 460 V, 60 Hz, 1 HP

% of Rated Load	**25**	**50**	**75**	**100**	**125**	**150**
Power Factor	40	61	73	80	85	87
Efficiency	66	77	80	80	79	77
Speed	3566	3536	3504	3468	3428	3382
Line amperes	0.92	1.04	1.2	1.47	1.73	2

ABB Motors and Mechanical Inc.

WINDING # 34WGW317

1 HP 3 PH 60 HZ 3450 RPM 460 V 3416M

Typical performance - not guaranteed values.

TORQUES(LB-FT): PO=6 PU=4.5 LR=4.6 LRA=11.4

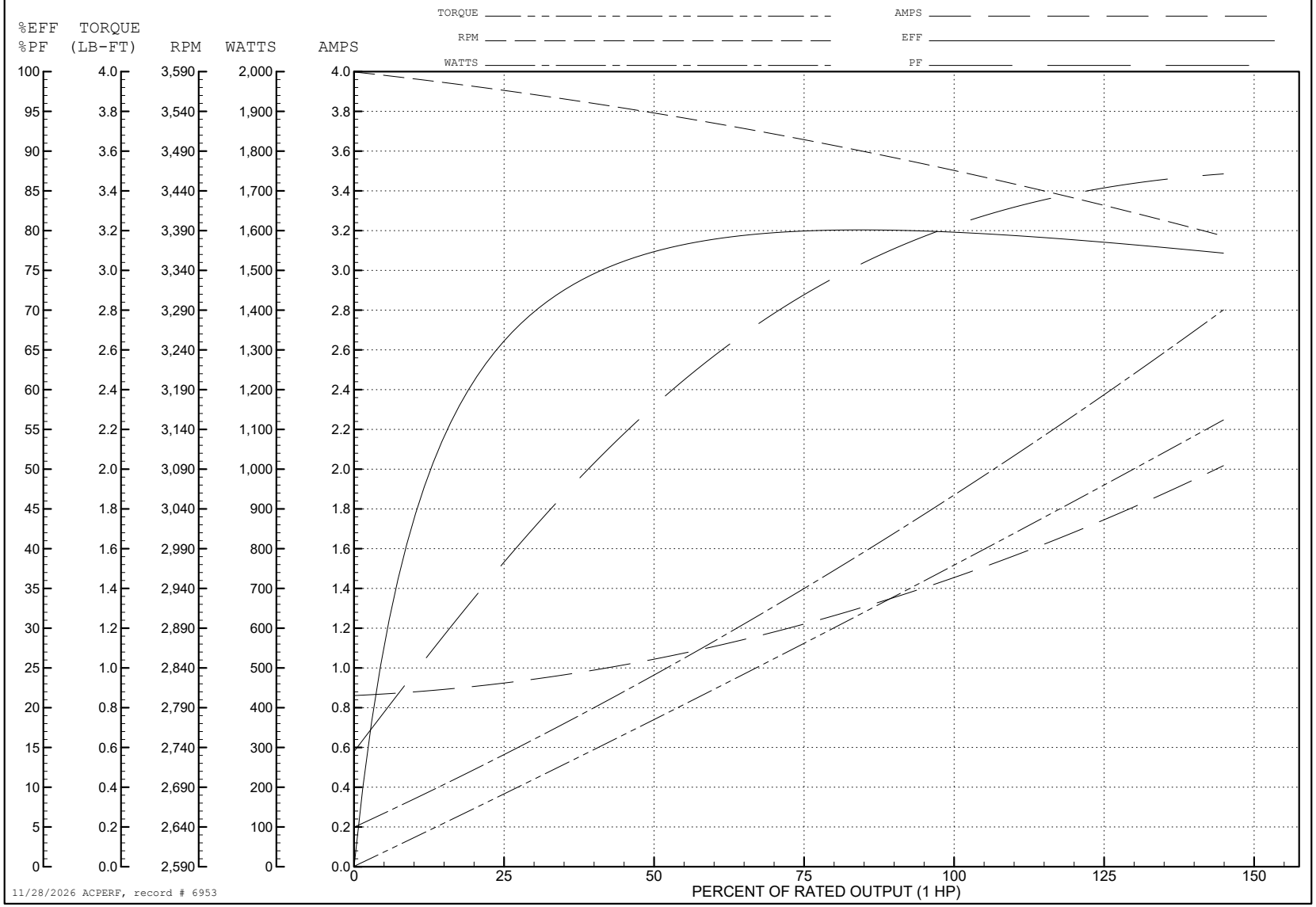

34LYG167

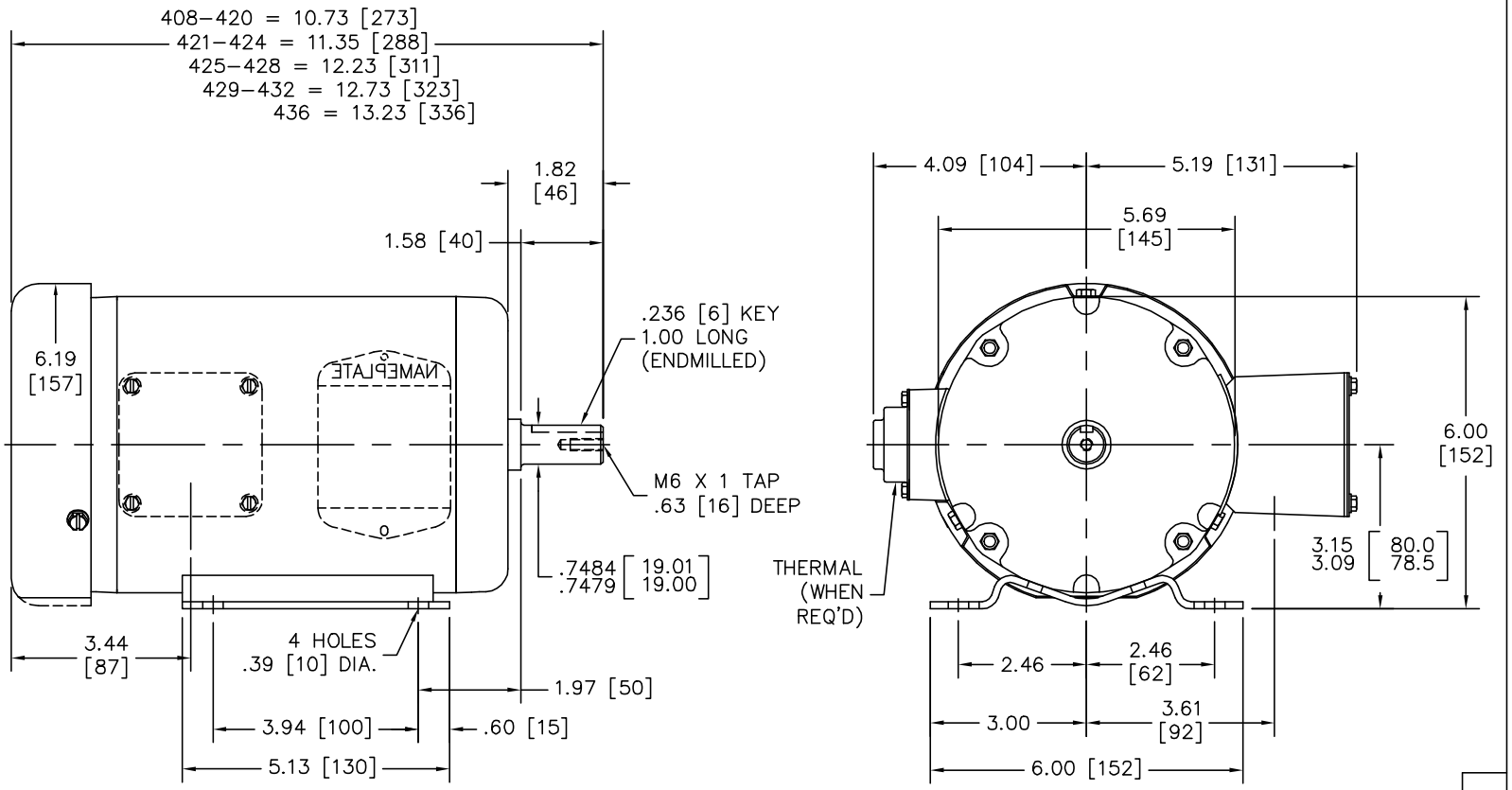

CUSTOMER IS RESPONSIBLE FOR DETERMINING THAT BALDOR'S PRODUCT WILL PERFORM SUITABLY IN THE INTENDED APPLICATION.

REV. DESC: FIX DIM LINE ON RIGHT VIEW KOBX		
REV. LTR: G	VERSION: 04	TDR: 000000986625
FILE: \AAA\00034\115	REVISED: 09:32:27 07/07/2016	BY: ENMAIYO
MTL: –		

BALDOR

HORZ 34M IEC D80 TEFC F2 W/M6 X 1 TAP SHAFT

SH 1 of 1

34LYG167

CD0005

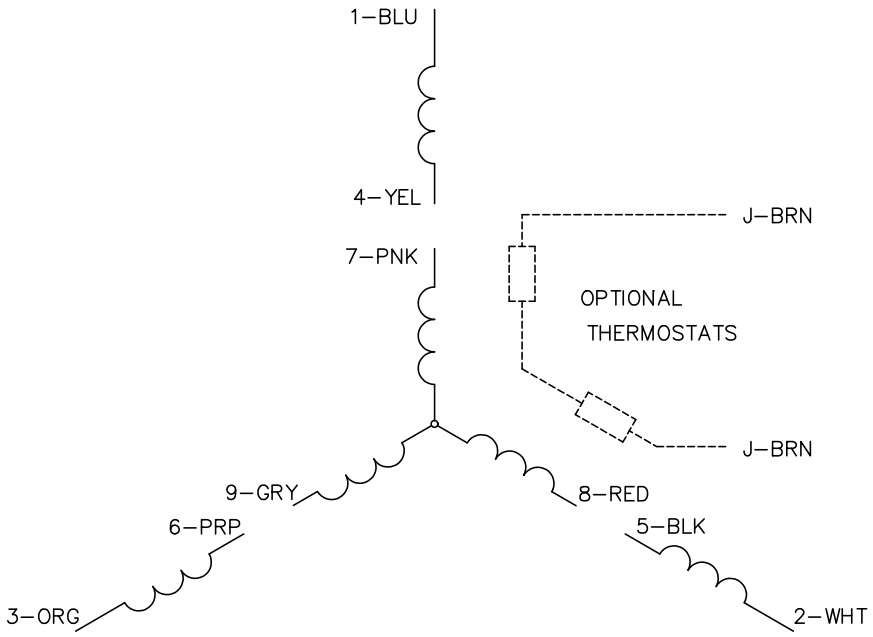

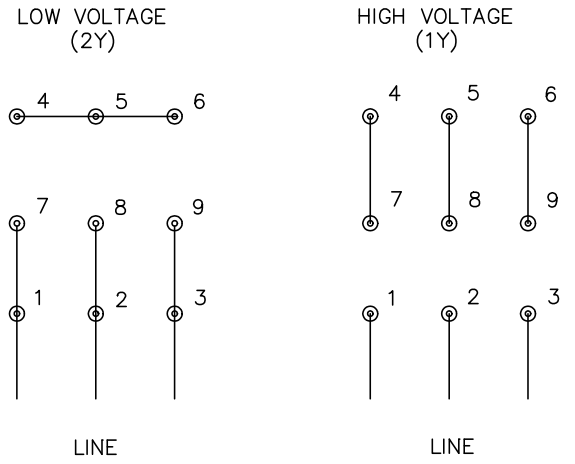

NOTES:

1. INTERCHANGE ANY TWO LINE LEADS TO REVERSE ROTATION.
2. OPTIONAL THERMOSTATS ARE PROVIDED WHEN SPECIFIED.
3. ACTUAL NUMBER OF INTERNAL PARALLEL CIRCUITS MAY BE A MULTIPLE OF THOSE SHOWN ABOVE.
4. LEAD COLORS ARE OPTIONAL. LEADS MUST ALWAYS BE NUMBERED AS SHOWN.

CD0005

REV. DESC: REVISE TO SHOW OPTIONAL COLORS			BALDOR ELECTRIC Co.
REV. LTR: E	BY: JLP	REVISED: 01/19/99 10:15	TDR: 0171435
CD0005		FILE: AAA00005140	MDL: –
		MTL: –	3PH, DV, 9 LEADS