05LYE056

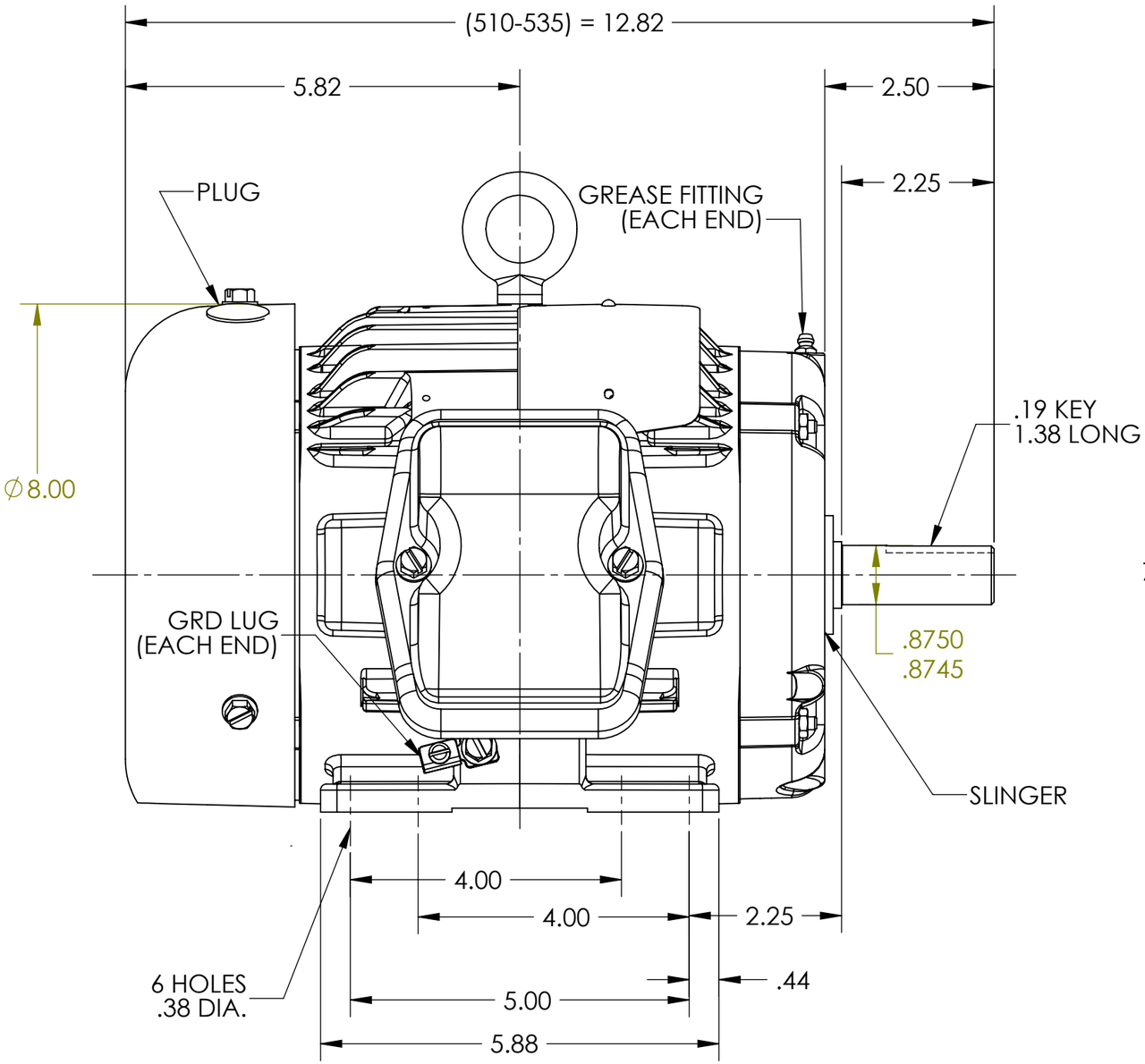

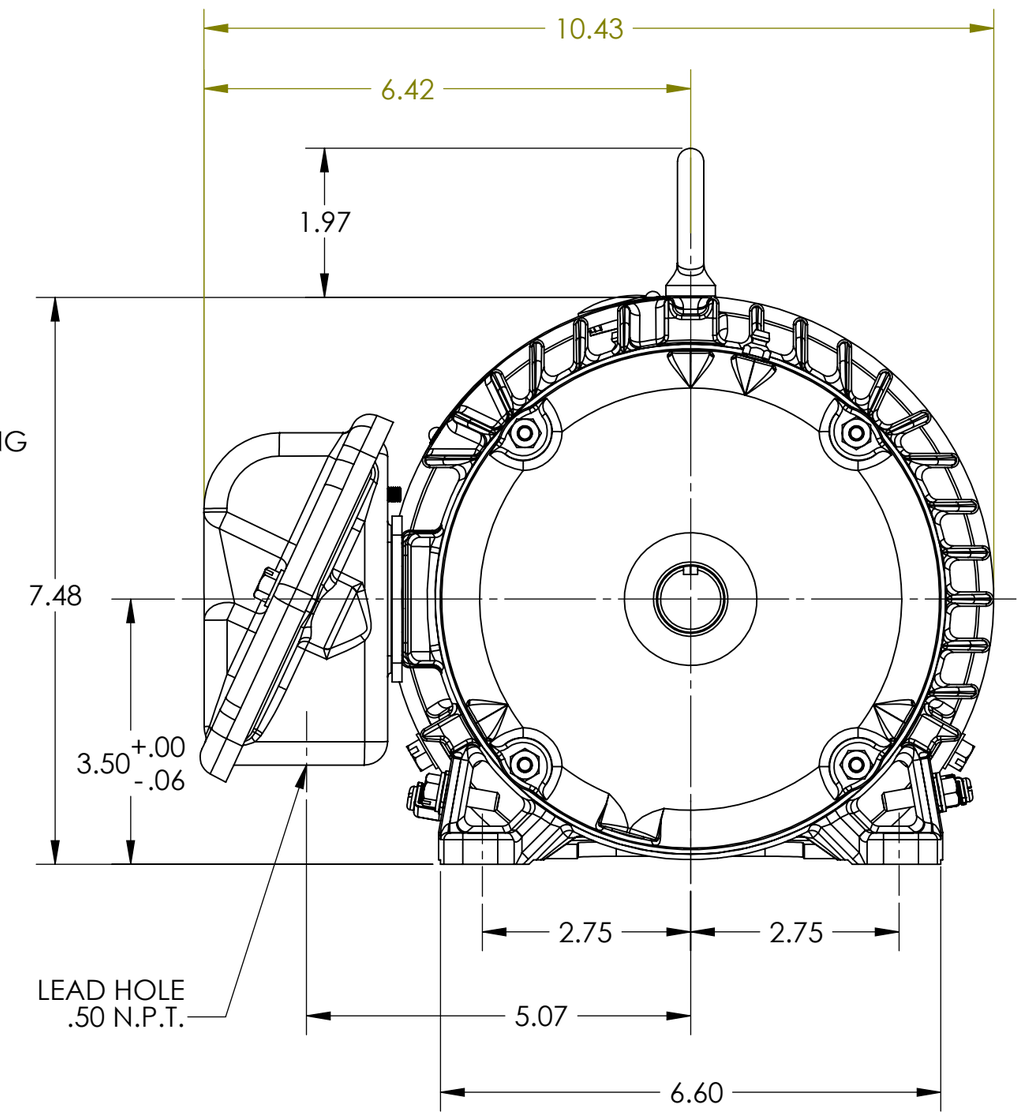

05LYE056

REV. DESC: ADDED S/P32-2 TO DESCRIPTION			
REV: F	VERSION: 03	REVISED: 02:48:21 03/11/2013	TDR: 000000788630
MODEL NO. 05LYE056			REF:
BY: ENADAF0			B

BALDOR ELECTRIC Co.

HORZ 143-5T TEFC 305M DD (S/P 32-2)

05LYE056