35LYM526

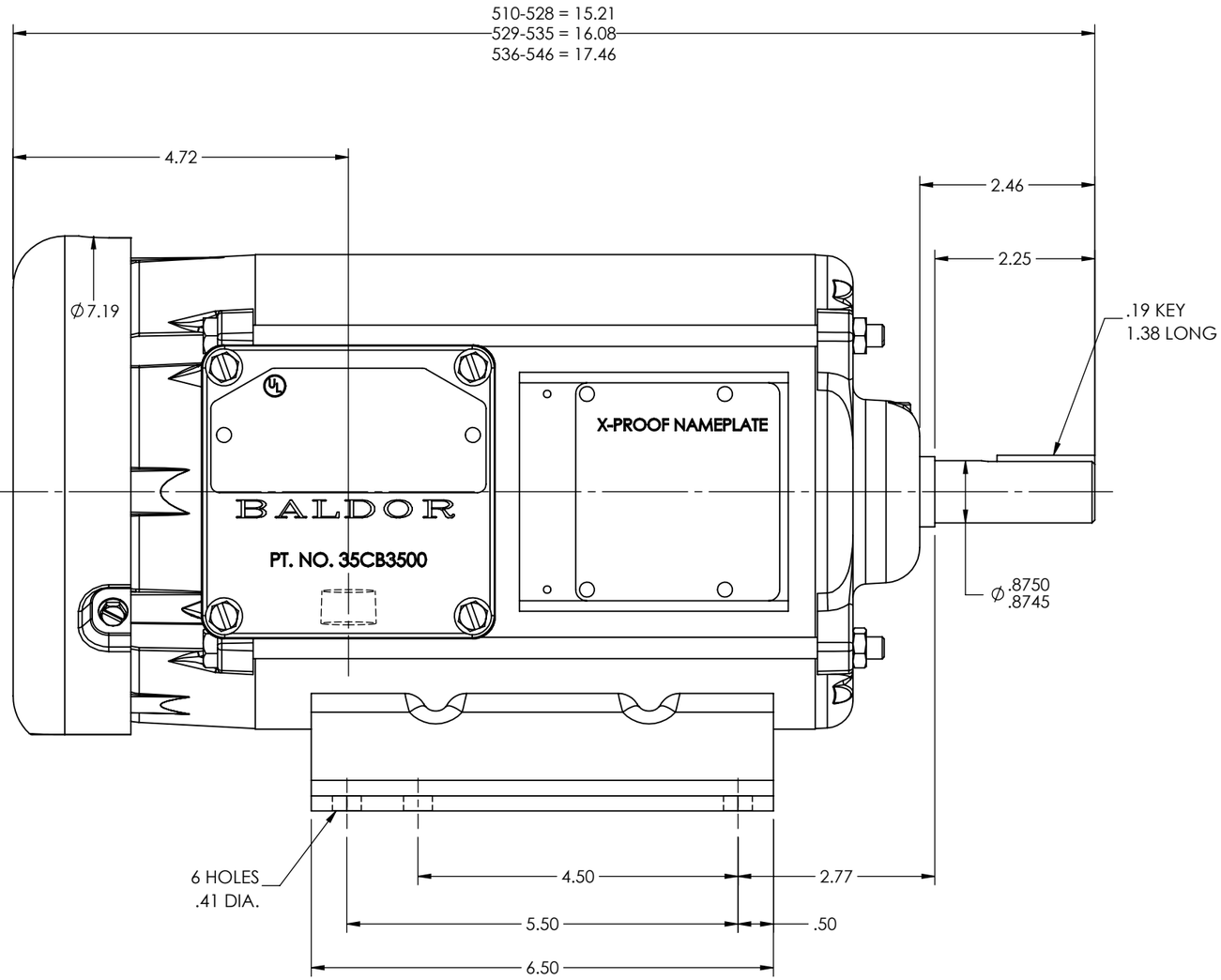

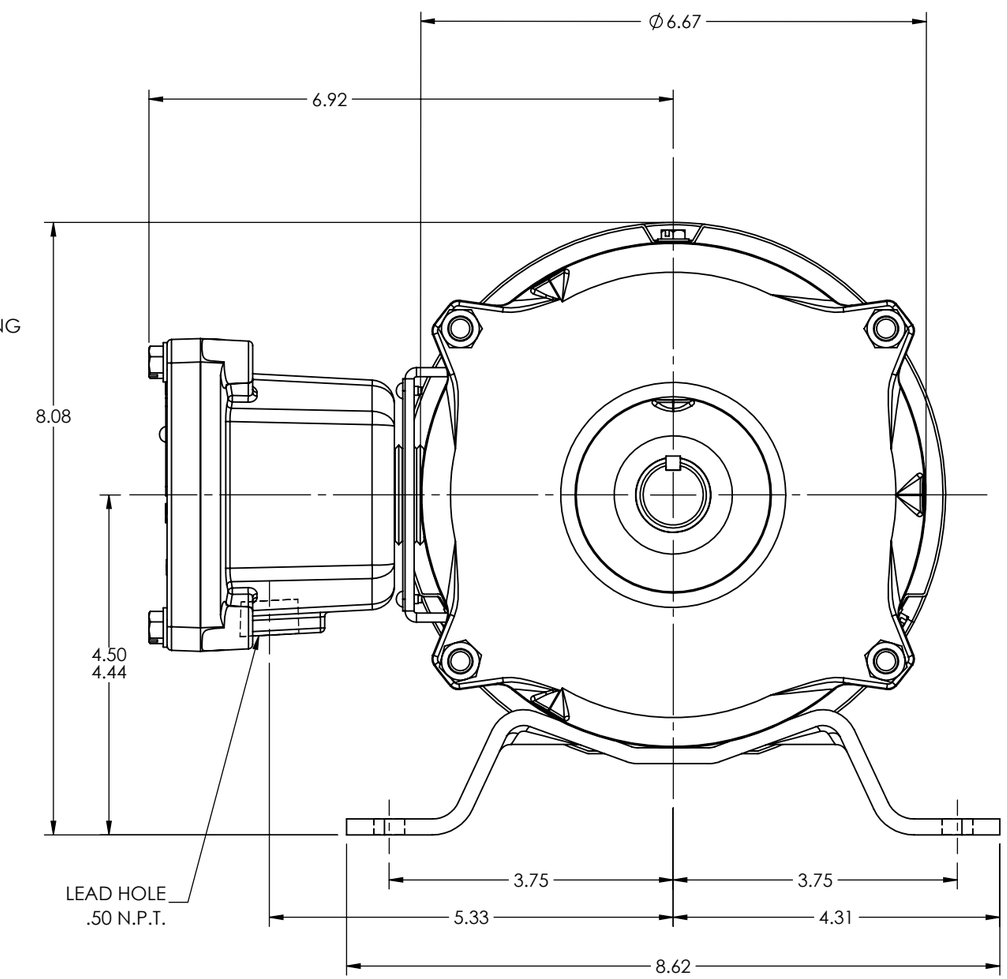

CUSTOMER IS RESPONSIBLE FOR DETERMINING THAT THE PRODUCT WILL PERFORM SUITABLY IN THE INTENDED APPLICATION

REV. DESC: CONVERT AUTOCAD DRW TO SWD DRW			
REV: C	VERSION: 02	REVISED: 10:33:34 04/06/2023	TDR: 000001207032
MODEL NO. 35LYM526			REF: -
BY: ENALEM0			B

BALDOR - RELIANCE®

STD HORZ 182-4 TEFC X35M CL I-GP D-CL II-GP F&G

35LYM526