Customer information packet

M7009A

.75HP, 3450RPM, 3PH, 60HZ, 56, X3413M, XPFC, F1
Class - CLI GP D; CLII GP F,G
Division - Division I

Copyright © All product information within this document is subject to ABB Motors and Mechanical Inc. copyright © protection, unless otherwise noted.
11/23/2026 3:19:31 AM

Specifications

Enclosure	XPFC
Frame	56
Frame Material	Steel
Frequency	60.00 Hz
Haz Area Class and Group	CLI GP D; CLII GP F,G
Haz Area Division	Division I
Motor Letter Type	Three Phase
Output @ Frequency	.750 HP @ 60 HZ
Phase	3
Synchronous Speed @ Frequency	3600 RPM @ 60 HZ
Voltage @ Frequency	208.0 V @ 60 HZ
	230.0 V @ 60 HZ
	460.0 V @ 60 HZ
Agency Approvals	UL
	CSA
	UR
Ambient Temperature	40 °C
Auxiliary Box	NO AUXILLARY BOX
Auxiliary Box Lead Termination	None
Base Indicator	Rigid
Bearing Grease Type	Polyrex EM (-20F +300F)
Blower	None
Current @ Voltage	1.300 A @ 460.0 V
	2.600 A @ 230.0 V
	2.700 A @ 208.0 V
Design Code	B
Drip Cover	No Drip Cover
Duty Rating	CONT
Efficiency @ 100% Load	75.0 %
Electrically Isolated Bearing	Not Electrically Isolated
Feedback Device	NO FEEDBACK
Front Face Code	Standard

Part Detail

Revision	AF
Type	AC
Mech. spec.	34-5323
Base	
Status	PRD/A
Elec. spec.	34WG5722
Layout	34LY5323
Eff. date	05-01-2024
CD Diagram	CD0007
Poles	02
Leads	12#18
Proprietary	False
Created date	01-01-0001

Front Shaft Indicator	None
Haz Area Temp Code	T3C
Heater Indicator	No Heater
High Voltage Full Load Amps	1.3 a
Insulation Class	B
Inverter Code	Not Inverter
KVA Code	K
Lifting Lugs	No Lifting Lugs
Locked Bearing Indicator	No Locked Bearing
Motor Lead Exit	Ko Box
Motor Lead Quantity/Wire Size	12 @ 18 AWG
Motor Lead Termination	Flying Leads
Motor Standards	NEMA
Motor Type	3413M
Mounting Arrangement	F1
Number of Poles	2
Overall Length	13.22 IN
Power Factor	73
Product Family	Hazardous Location Motor
Pulley End Bearing Type	Ball
Pulley Face Code	Standard
Pulley Shaft Indicator	Standard
Rodent Screen	None
RoHS Status	ROHS COMPLIANT
Service Factor	1.00
Shaft Diameter	0.625 IN
Shaft Extension Location	Pulley End
Shaft Ground Indicator	No Shaft Grounding
Shaft Rotation	Reversible
Shaft Slinger Indicator	No Slinger
Speed	3450 rpm
Speed Code	Single Speed
Starting Method	Direct on line
Thermal Device - Bearing	None

Thermal Device - Winding	None
Vibration Sensor Indicator	No Vibration Sensor
Winding Thermal 1	Automatic Thermal Overload
Winding Thermal 1 Location	SB

Nameplate

NP0016XPSL							
NO.		**CC**					
SER. #							
SPEC	34-5323-5722						
CAT.NO.	M7009A						
H.P.	.75	**T. CODE**	T3C				
VOLTS	208-230/460						
AMPS	2.7-2.6/1.3						
R.P.M.	3450						
HZ	60	**PH**	3	**CLASS**	B		
SER.F.	1.00	**DES**	B	**CODE**	K		
RATING	40C AMB-CONT						
FRAME	56			**NEMA NOM. EFF**	75		
		PF	73				
BLANK							

AC Induction Motor Performance Data
Record # 6819
Typical performance - not guaranteed values

Winding: 34WG5722-R001	**Type:** 3413M	**Enclosure:** XPFC

Nameplate Data				**460 V, 60 Hz: High Voltage Connection**	
Rated Output (HP)			.75	**Full Load Torque**	1.2 LB-FT
Volts			208-230/460	**Start Configuration**	direct on line
Full Load Amps			2.7-2.6/1.3	**Breakdown Torque**	4.8 LB-FT
R.P.M.			3450	**Pull-up Torque**	3.5 LB-FT
Hz	60	**Phase**	3	**Locked-rotor Torque**	3.9 LB-FT
NEMA Design Code	B	**KVA Code**	K	**Starting Current**	7.6 A
Service Factor (S.F.)			1	**No-load Current**	0.85 A
NEMA Nom. Eff.	75	**Power Factor**	73	**Line-line Res. @ 25ºC**	24.6 Ω
Rating - Duty			40C AMB-CONT	**Temp. Rise @ Rated Load**	64°C

Load Characteristics 460 V, 60 Hz, 0.75 HP

% of Rated Load	**25**	**50**	**75**	**100**	**125**	**150**
Power Factor	39	58	67	78	82	84
Efficiency	57.7	70.6	73.6	75.1	74.7	74
Speed	3553	3518	3481	3440	3395	3344
Line amperes	0.95	1.02	1.12	1.33	1.5	1.62

ABB Motors and Mechanical Inc.

WINDING # 34WG5722

0.75 HP 3 PH 60 HZ 3450 RPM 460 V 3413M

TORQUES(LB-FT): PO=4.8 PU=3.5 LR=3.9 LRA=7.6

Typical performance - not guaranteed values.

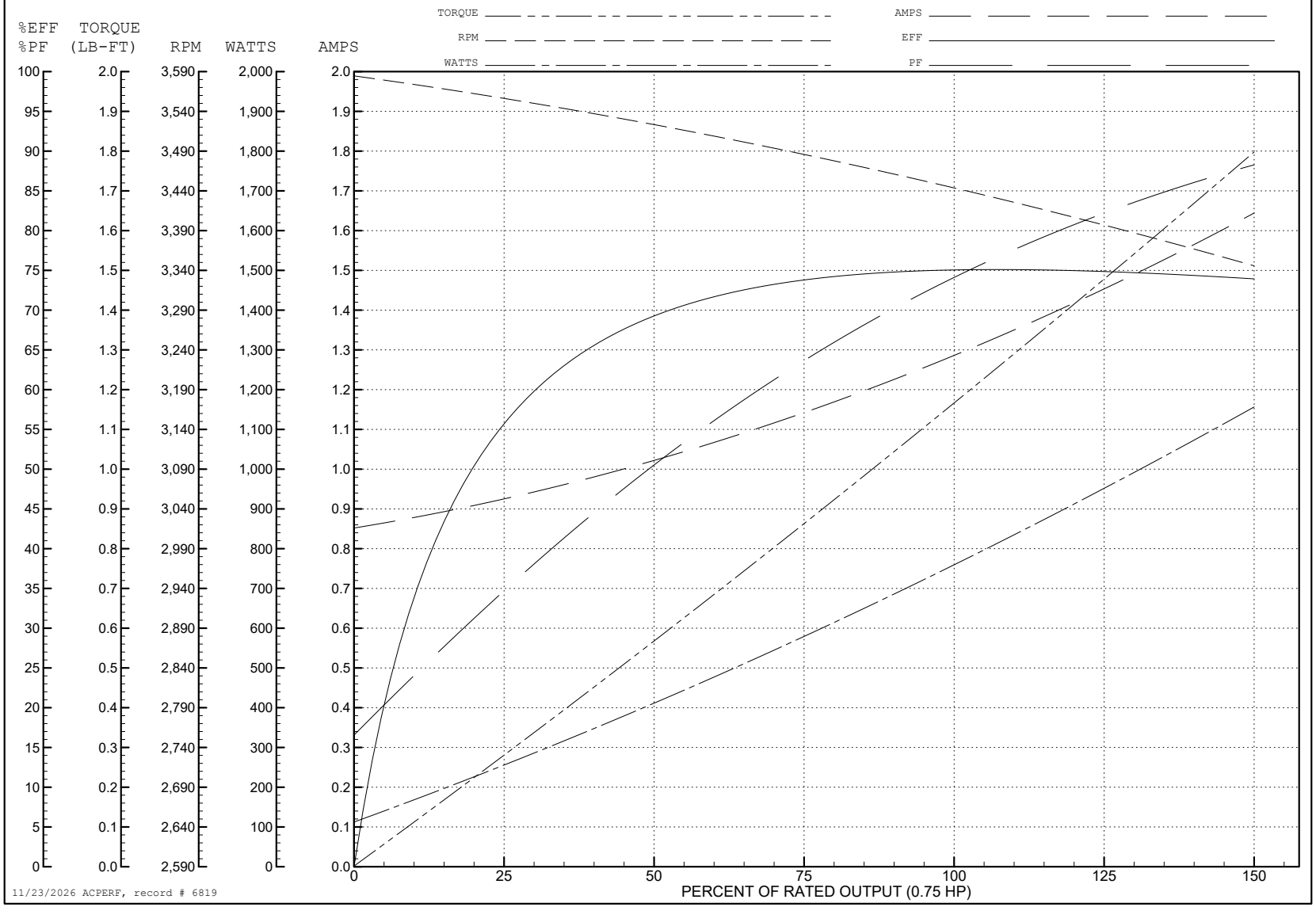

11/23/2026 ACPERF, record # 6819

34LY5323

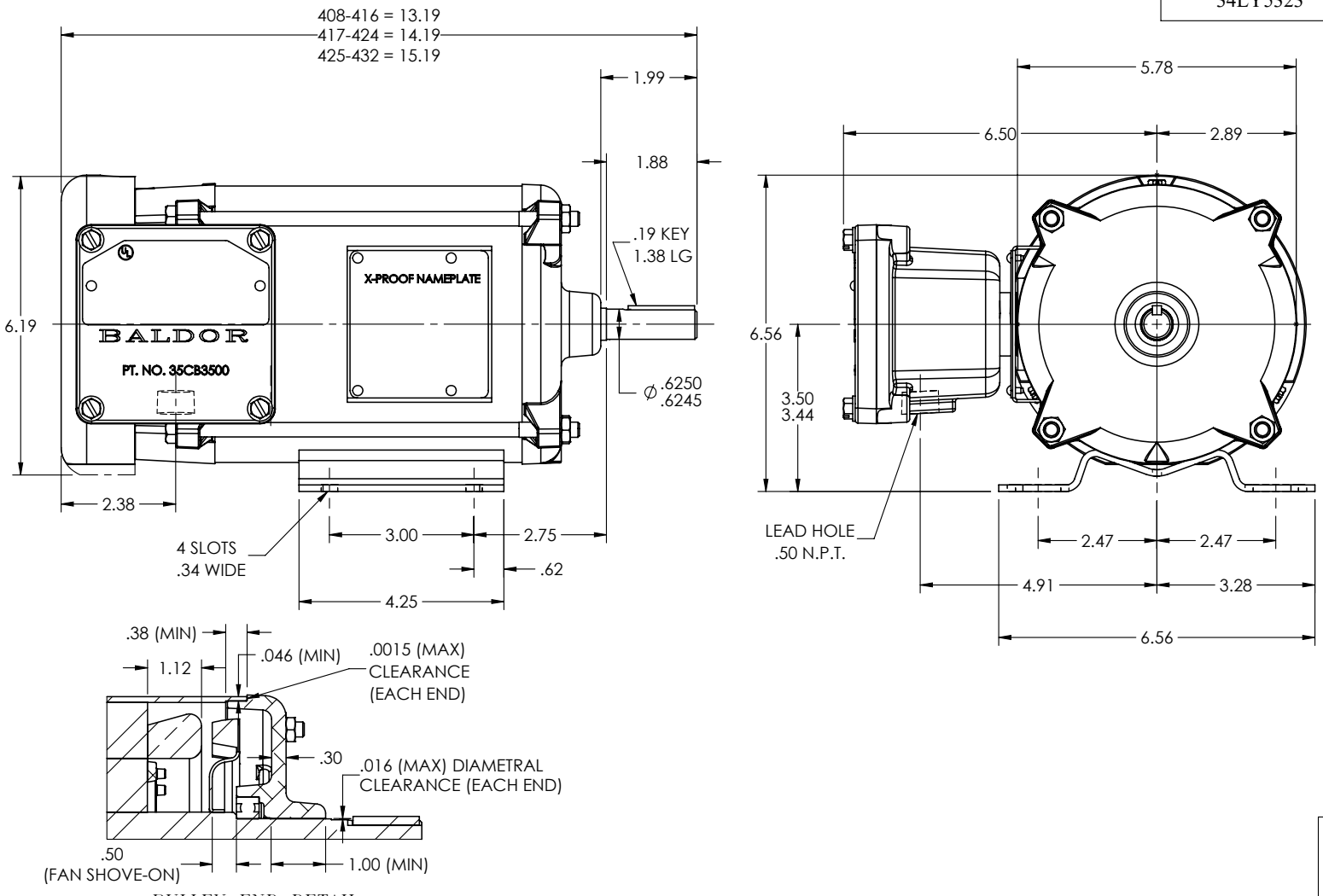

PULLEY END DETAIL

CUSTOMER IS RESPONSIBLE FOR DETERMINING THAT THE PRODUCT WILL PERFORM SUITABLY IN THE INTENDED APPLICATION

REV. DESC: LOAD TO SOLIDWORKS - REV K			
REV: L	VERSION: 08	REVISED: 12:27:48 12/15/2022	TDR: 000001201165
34LY5323	MODEL NO. 34LY5323		REF: -
	BY: ENFRAJ0		

BALDOR - RELIANCE®

HORZ X34M 56 XPFC CL-I GP-D, CL-II GP-F&G, .50 NPT LEAD

34LY5323

CD0007

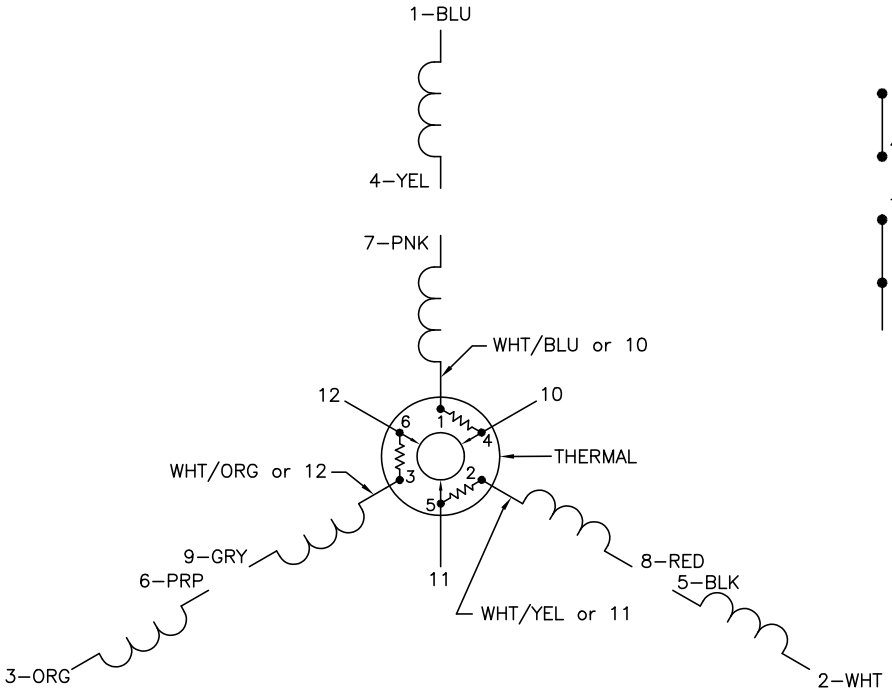

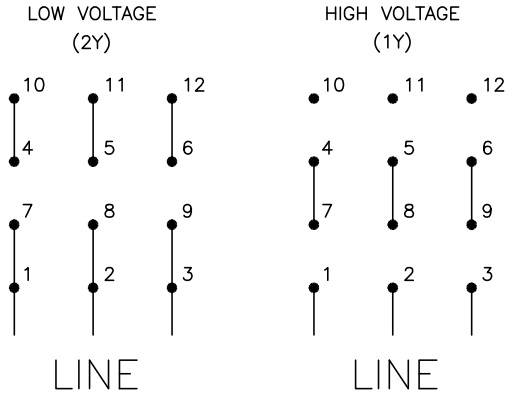

NOTES:

1. INTERCHANGE ANY TWO LINE LEADS TO REVERSE ROTATION.
2. ACTUAL NUMBER OF INTERNAL PARALLEL CIRCUITS MAY VARY.
3. LEAD COLORS ARE OPTIONAL. LEADS MUST ALWAYS BE NUMBERED AS SHOWN.

REV. DESC: ADDED "CK" PLANT CODE			BALDOR ELECTRIC Co.
REV. LTR: E	BY: EAH	REVISED: 05/06/99 17:1	TDR: 0181040
CD0007		FILE: AAA00008370	MDL: –
		MTL: –	3PH, DV, THERMAL, 12 LEADS

CD0007