A-C MOTOR
CONNECTION DIAGRAM

STANDARD 6 LEAD Y START - DELTA RUN

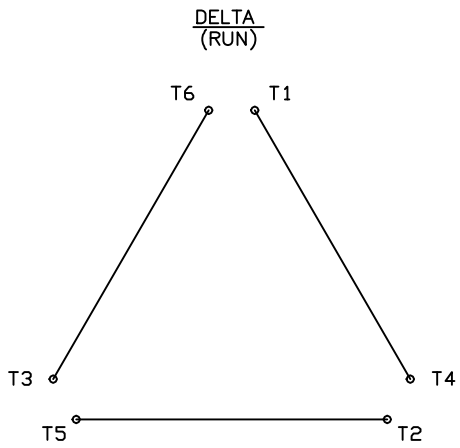

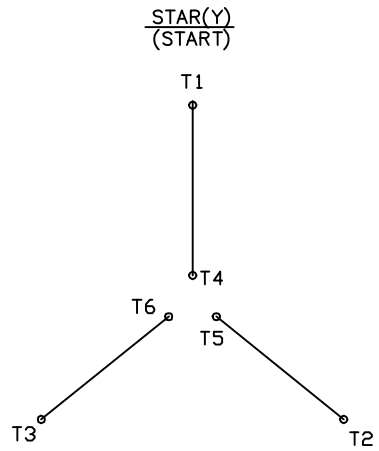

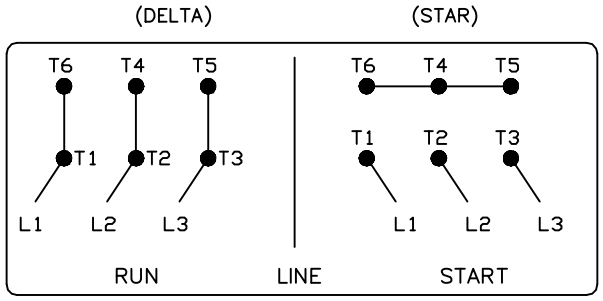

(N. P. 1767-DC)

REV. DESC: ADDED T4 TO Y CONNECT DIAGRAM		
REV. LTR: D	VERSION: 04	TDR: 000000847713
FILE: \RAG\00001\808	REVISED: 10:41:26 04/08/2014	BY: RAGJSS1
MTL: -		

BALDOR

CONNECT DIAGRAM STD 6 LEAD Y START DELTA RUN

SH 1 of 1

416820-008