36LYQ306

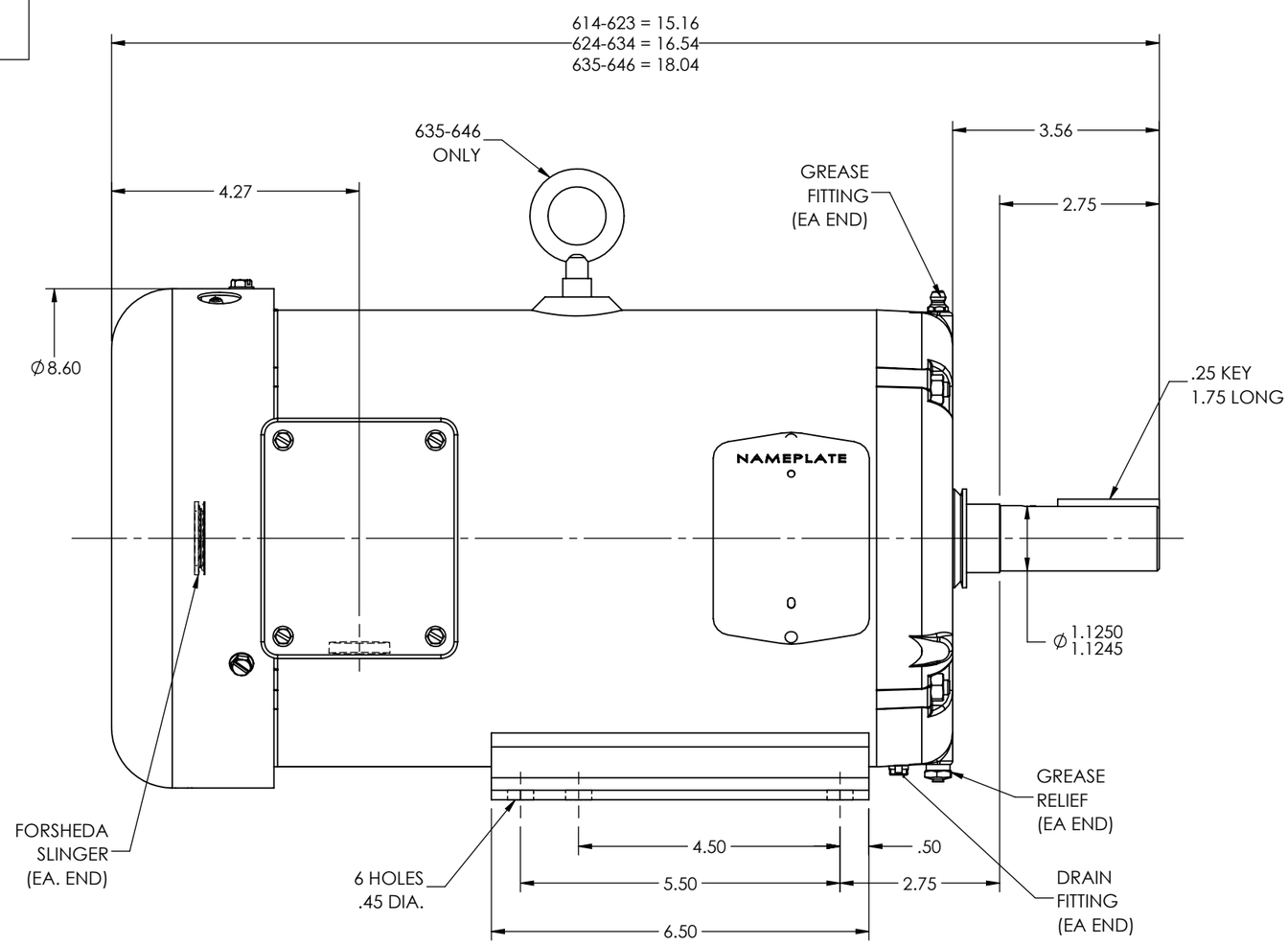

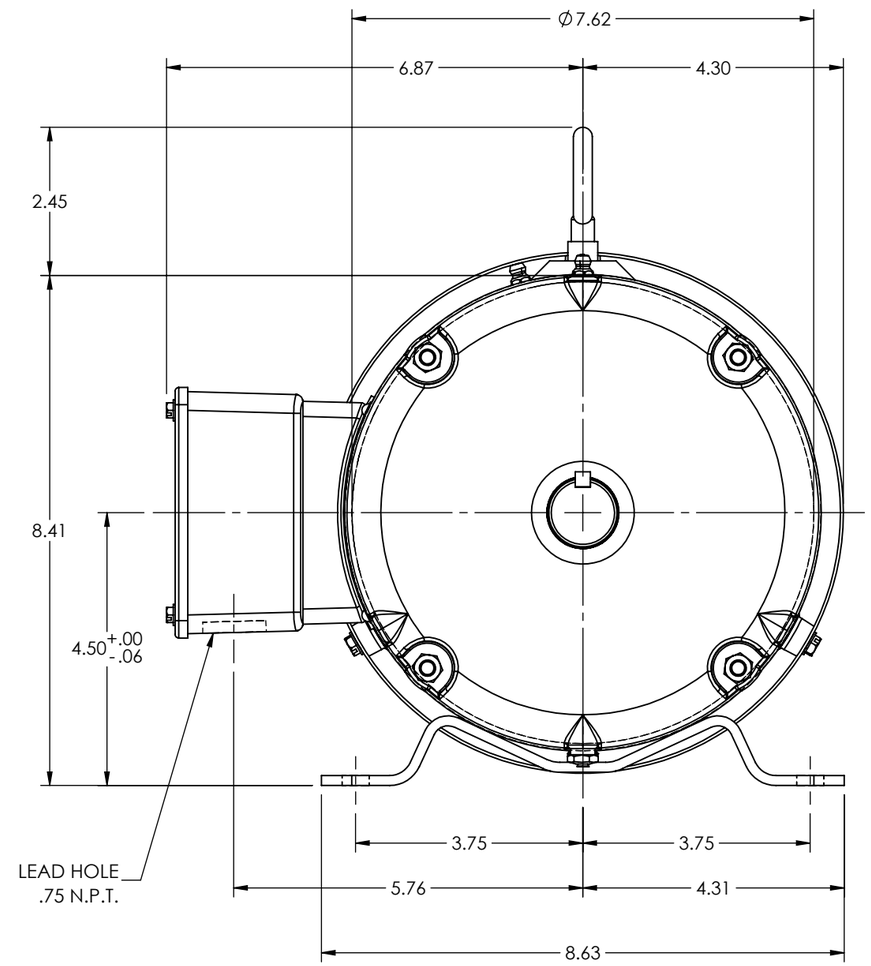

36LYQ306

CUSTOMER IS RESPONSIBLE FOR DETERMINING THAT THE PRODUCT WILL PERFORM SUITABLY IN THE INTENDED APPLICATION

REV. DESC: CONVERT AUTOCAD TO SWD DRAWING			
REV: A	VERSION: 01	REVISED: 12:58:37 05/10/2024	TDR: 000001231935
MODEL NO. 36LYQ306			REF: -
BY: USALMAZ			B

BALDOR - RELIANCE®

HORZ 182-4T TEFC M WPD (IP55)W/FORSHEDA SLINGERS EACH END