ABB BALDOR RELIANCE

Customer information packet

M3601

.75HP, 1140RPM, 3PH, 60HZ, 182, 3515M, TEFC, F1
Class - None
Division - Not Applicable

Copyright © All product information within this document is subject to ABB Motors and Mechanical Inc. copyright © protection, unless otherwise noted.
11/27/2026 2:46:45 AM

Specifications

Enclosure	TEFC
Frame	182
Frame Material	Steel
Frequency	60.00 Hz
Haz Area Class and Group	None
Haz Area Division	Not Applicable
Motor Letter Type	Three Phase
Output @ Frequency	.750 HP @ 60 HZ
Phase	3
Synchronous Speed @ Frequency	1200 RPM @ 60 HZ
Voltage @ Frequency	460.0 V @ 60 HZ
	230.0 V @ 60 HZ
	208.0 V @ 60 HZ
Agency Approvals	CSA
	UR
Ambient Temperature	40 °C
Auxiliary Box	NO AUXILLARY BOX
Auxiliary Box Lead Termination	None
Base Indicator	Rigid
Bearing Grease Type	Polyrex EM (-20F +300F)
Blower	None
Current @ Voltage	3.300 A @ 208.0 V
	3.000 A @ 230.0 V
	1.500 A @ 460.0 V
Design Code	B
Drip Cover	No Drip Cover
Duty Rating	CONT
Efficiency @ 100% Load	72.0 %
Electrically Isolated Bearing	Not Electrically Isolated
Feedback Device	NO FEEDBACK
Front Face Code	Standard
Front Shaft Indicator	None

Part Detail

Revision	R
Type	AC
Mech. spec.	35L108
Base	
Status	NLA/A
Elec. spec.	35WGM097
Layout	35LYL108
Eff. date	01-02-2025
CD Diagram	CD0005
Poles	06
Leads	9#18
Proprietary	False
Created date	10-14-2008

Heater Indicator	Heater Included, 120 V
High Voltage Full Load Amps	1.5 a
Insulation Class	F
Inverter Code	Not Inverter
KVA Code	K
Lifting Lugs	No Lifting Lugs
Locked Bearing Indicator	No Locked Bearing
Motor Lead Exit	Ko Box
Motor Lead Quantity/Wire Size	9 @ 18 AWG
Motor Lead Termination	Flying Leads
Motor Standards	NEMA
Motor Type	3514M
Mounting Arrangement	F1
Number of Poles	6
Overall Length	13.76 IN
Power Factor	64
Product Family	General Purpose
Pulley End Bearing Type	Ball
Pulley Face Code	Standard
Pulley Shaft Indicator	Standard
Rodent Screen	None
RoHS Status	ROHS COMPLIANT
Service Factor	1.15
Shaft Diameter	0.875 IN
Shaft Extension Location	Pulley End
Shaft Ground Indicator	No Shaft Grounding
Shaft Rotation	Reversible
Shaft Slinger Indicator	No Slinger
Speed	1140 rpm
Speed Code	Single Speed
Starting Method	Direct on line
Thermal Device - Bearing	None
Thermal Device - Winding	None
Vibration Sensor Indicator	No Vibration Sensor

Winding Thermal 1	None
Winding Thermal 2	None

Nameplate

NP1256L								
CAT.NO.								
SPEC.	35L108M097							
HP	.75							
VOLTS	208-230/460							
AMP	3.3-3/1.5							
RPM	1140							
FRAME	182	**HZ**	60			**PH**	3	
SER.F.	1.15	**CODE**	K	**DES**	B	**CLASS**	F	
NEMA-NOM-EFF	72	**PF**	64					
RATING	40C AMB-CONT							
CC								
DE	6206	**ODE**	6203					
ENCL	TEFC	**SN**						

AC Induction Motor Performance Data
Record # 28969
Typical performance - not guaranteed values

Winding: 35WGM097-R001	**Type:** 3514M	**Enclosure:** TEFC

Nameplate Data			**460 V, 60 Hz: High Voltage Connection**	
Rated Output (HP)		.75	**Full Load Torque**	3.43 LB-FT
Volts		208-230/460	**Start Configuration**	direct on line
Full Load Amps		3.3-3.00/1.50	**Breakdown Torque**	10.1 LB-FT
R.P.M.		1140	**Pull-up Torque**	7.47 LB-FT
Hz	60 **Phase**	3	**Locked-rotor Torque**	8.29 LB-FT
NEMA Design Code	B **KVA Code**	K	**Starting Current**	7.65 A
Service Factor (S.F.)		1.15	**No-load Current**	1.26 A
NEMA Nom. Eff.	72 **Power Factor**	64	**Line-line Res. @ 25ºC**	28.8 Ω
Rating - Duty		40C AMB-CONT	**Temp. Rise @ Rated Load**	76°C
S.F. Amps		3.5-3.22/1.61	**Temp. Rise @ S.F. Load**	86°C
			Locked-rotor Power Factor	65.9
			Rotor inertia	0.0832 LB-FT2

Load Characteristics 460 V, 60 Hz, 0.75 HP

% of Rated Load	**25**	**50**	**75**	**100**	**125**	**150**	**S.F.**
Power Factor	27	41	53	63	71	78	69
Efficiency	51.1	64.6	69.8	71.9	71.7	69	72.7
Speed	1185	1171	1156	1138	1118	1085	1128
Line amperes	1.26	1.32	1.41	1.54	1.73	2.03	1.61

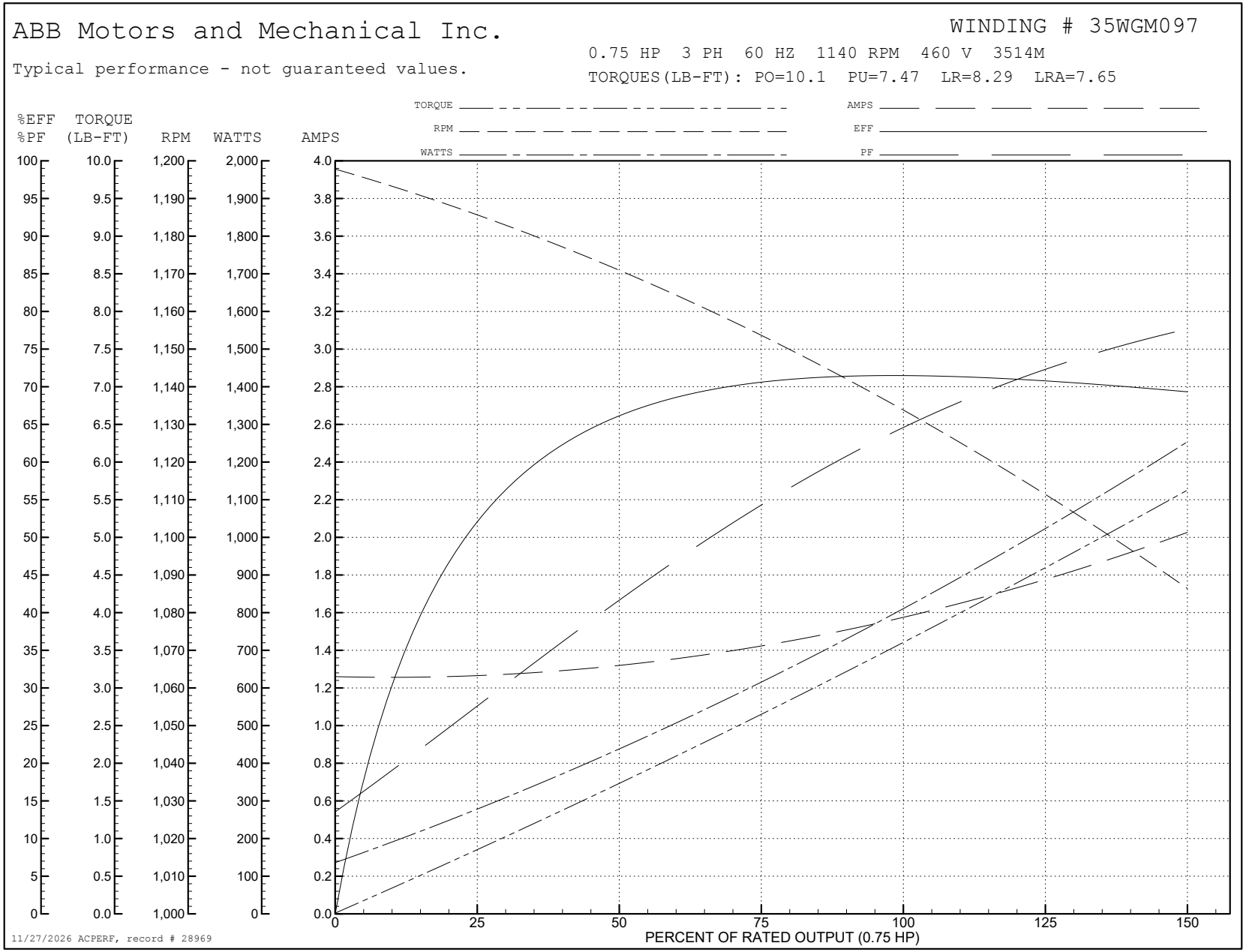
ABB Motors and Mechanical Inc.
WINDING # 35WGM097
Typical performance - not guaranteed values.
0.75 HP 3 PH 60 HZ 1140 RPM 460 V 3514M
TORQUES(LB-FT): PO=10.1 PU=7.47 LR=8.29 LRA=7.65
TORQUE
RPM
WATTS
AMPS
EFF
PF
%EFF %PF
TORQUE (LB-FT)
RPM
WATTS
AMPS
PERCENT OF RATED OUTPUT (0.75 HP)
11/27/2026 ACPERF, record # 28969

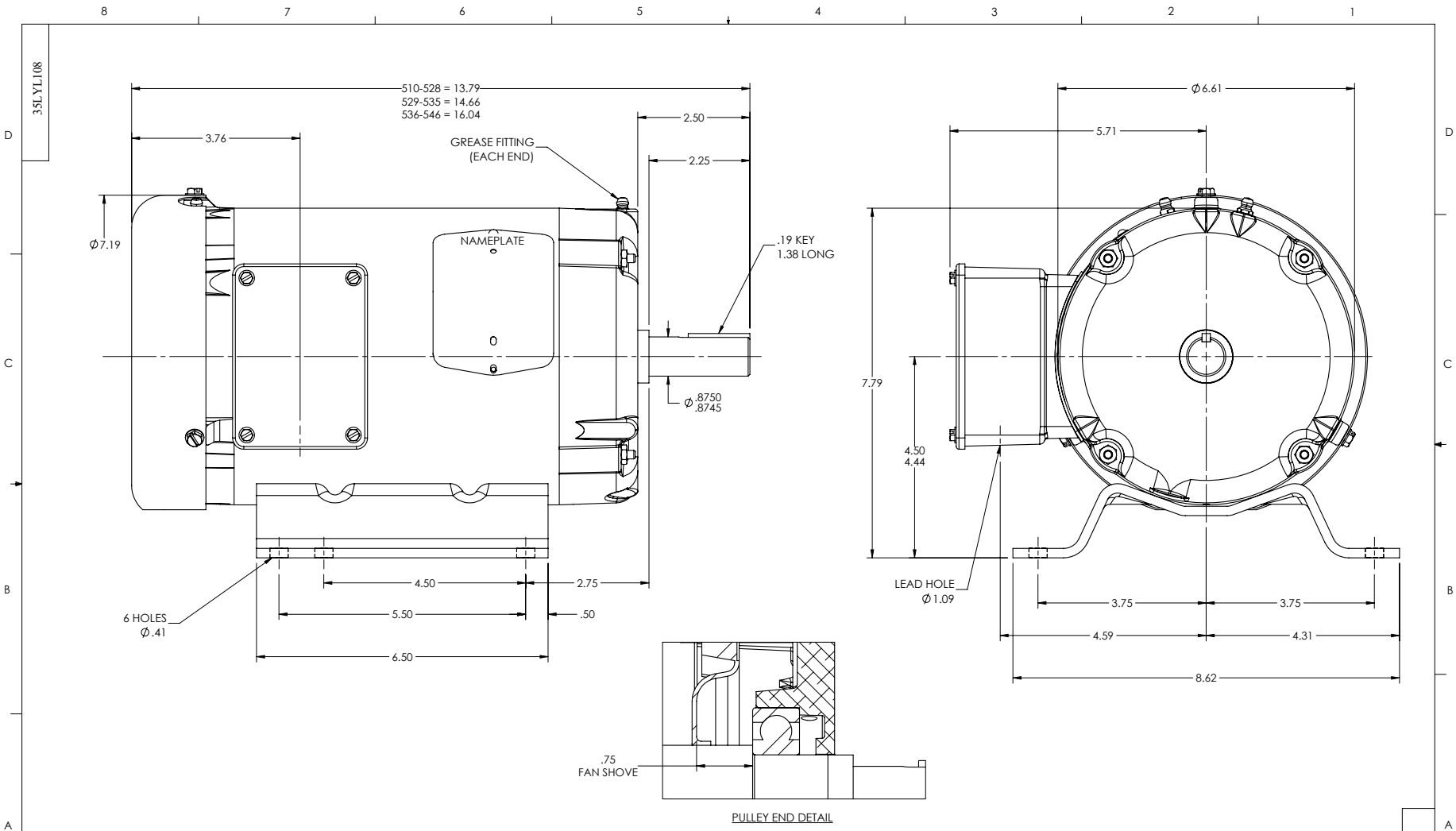
35LYL108
510-528 = 13.79
529-535 = 14.66
536-546 = 16.04
3.76
2.50
2.25
GREASE FITTING
(EACH END)
Ø7.19
NAMEPLATE
.19 KEY
1.38 LONG
Ø.8750
.8745
4.50
2.75
5.50
.50
6.50
6 HOLES
Ø.41
Ø6.61
5.71
7.79
4.50
4.44
LEAD HOLE
Ø1.09
3.75
3.75
4.59
4.31
8.62
.75
FAN SHOVE
PULLEY END DETAIL
CUSTOMER IS RESPONSIBLE FOR DETERMINING THAT THE PRODUCT WILL PERFORM SUITABLY IN THE INTENDED APPLICATION
REV. DESC: UPDATE 3D MODEL BOM PER REV X, NO CHG TO 2D PRINT
REV: J
VERSION: 03
REVISED: 09:55:23 03/16/2022
TDR: 000001187751
MODEL NO. 35LYL108
REF: -
BY: USBUFRA
B
BALDOR - RELIANCE®
STD HORZ 182-4 TEFC 35M
SH 1 of 1
35LYL108

CD0005

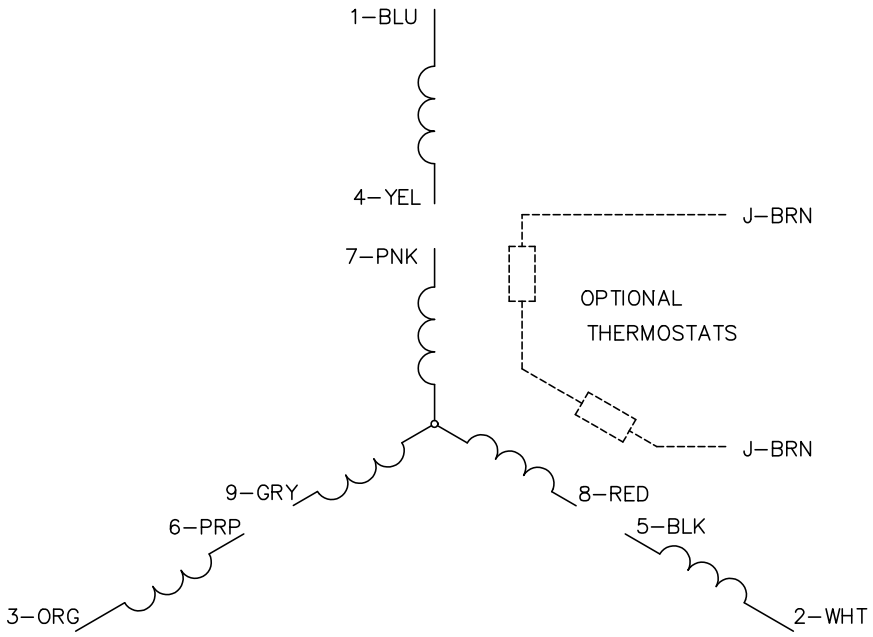

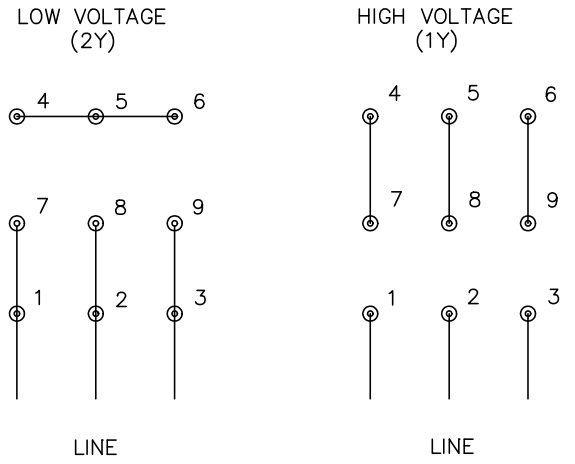

NOTES:

1. INTERCHANGE ANY TWO LINE LEADS TO REVERSE ROTATION.
2. OPTIONAL THERMOSTATS ARE PROVIDED WHEN SPECIFIED.
3. ACTUAL NUMBER OF INTERNAL PARALLEL CIRCUITS MAY BE A MULTIPLE OF THOSE SHOWN ABOVE.
4. LEAD COLORS ARE OPTIONAL. LEADS MUST ALWAYS BE NUMBERED AS SHOWN.

CD0005

REV. DESC: REVISE TO SHOW OPTIONAL COLORS			BALDOR ELECTRIC Co.
REV. LTR: E	BY: JLP	REVISED: 01/19/99 10:15	TDR: 0171435
CD0005		FILE: AAA00005140	MDL: –
		MTL: –	3PH, DV, 9 LEADS