09LYC111

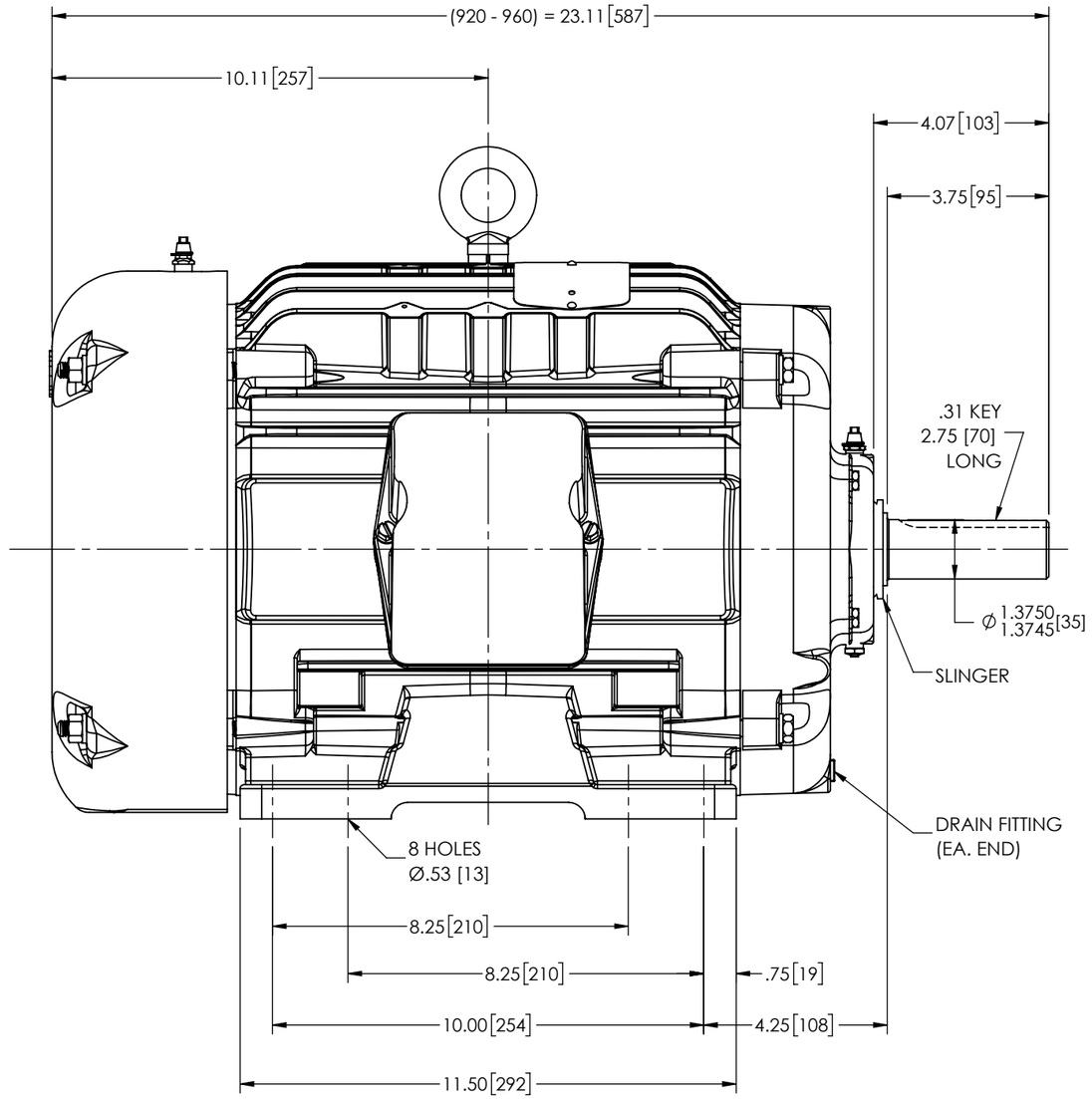

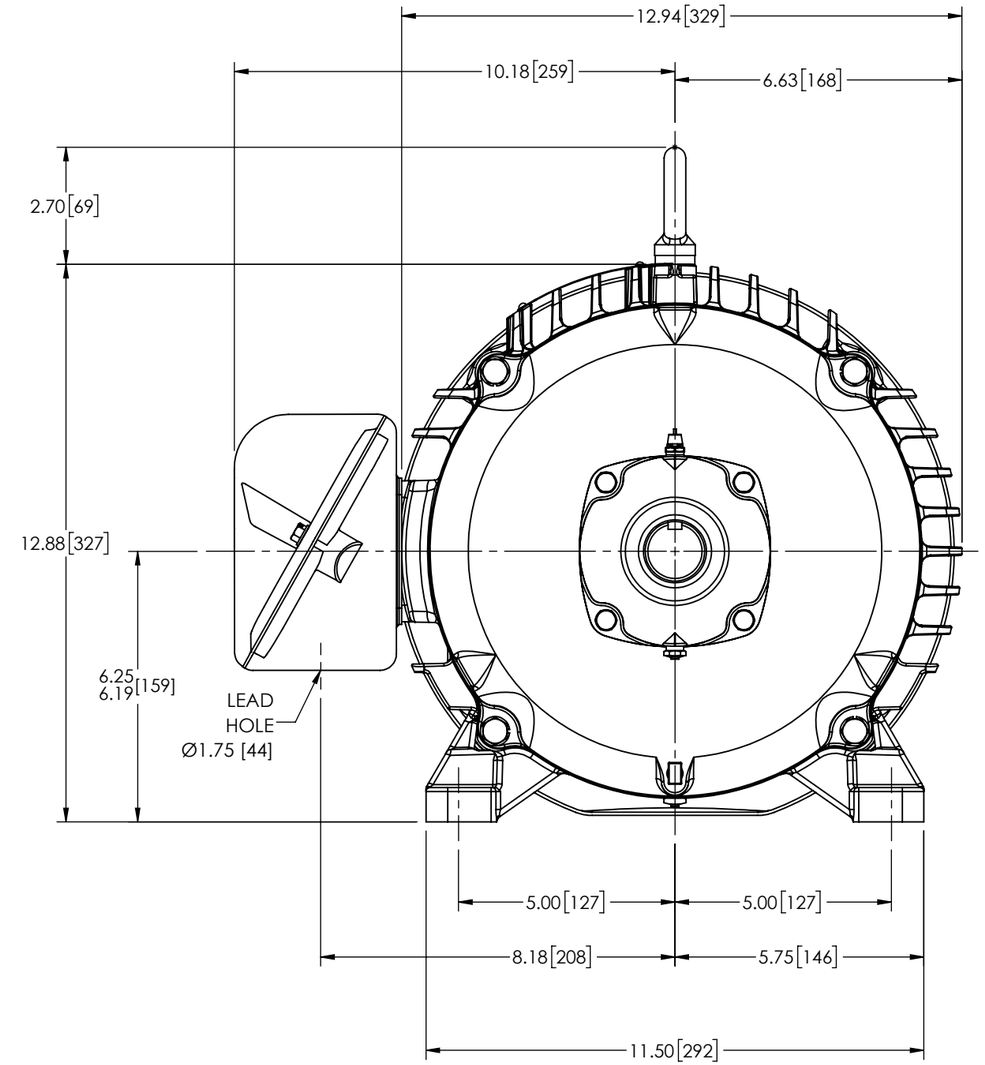

CUSTOMER IS RESPONSIBLE FOR DETERMINING THAT THE PRODUCT WILL PERFORM SUITABLY IN THE INTENDED APPLICATION

REV. DESC: CHG 09SF1112A01 TO '1107A02, 09CB3002 TO 'CB3003			
REV: N	VERSION: 09	REVISED: 04:05:00 04/19/2021	TDR: 000001165978
MODEL NO. 09LYC111			REF: -
BY: USODDIL			B

BALDOR - RELIANCE®

HORZ TEFC 254-6U

09LYC111