OM3001A05

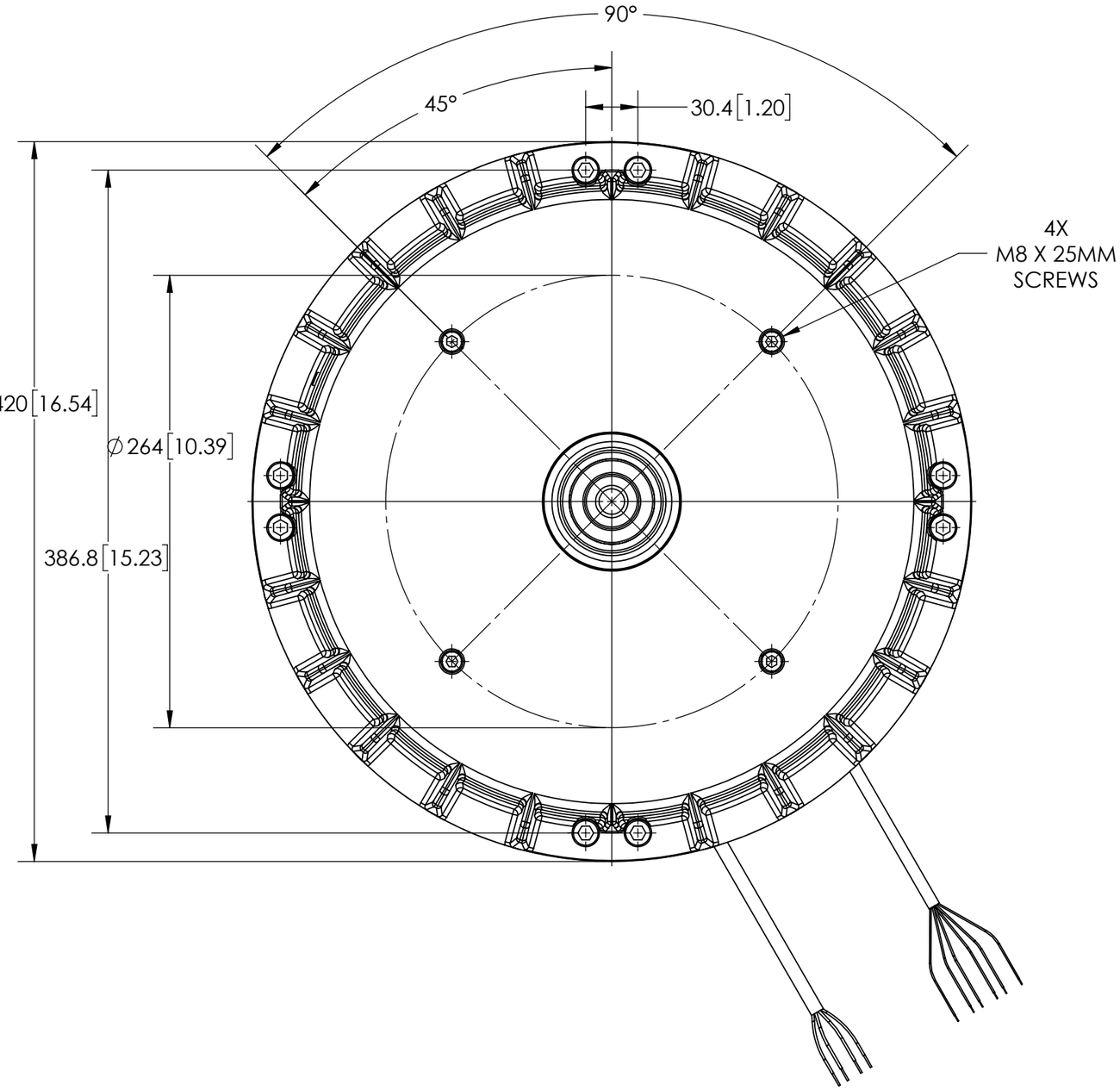

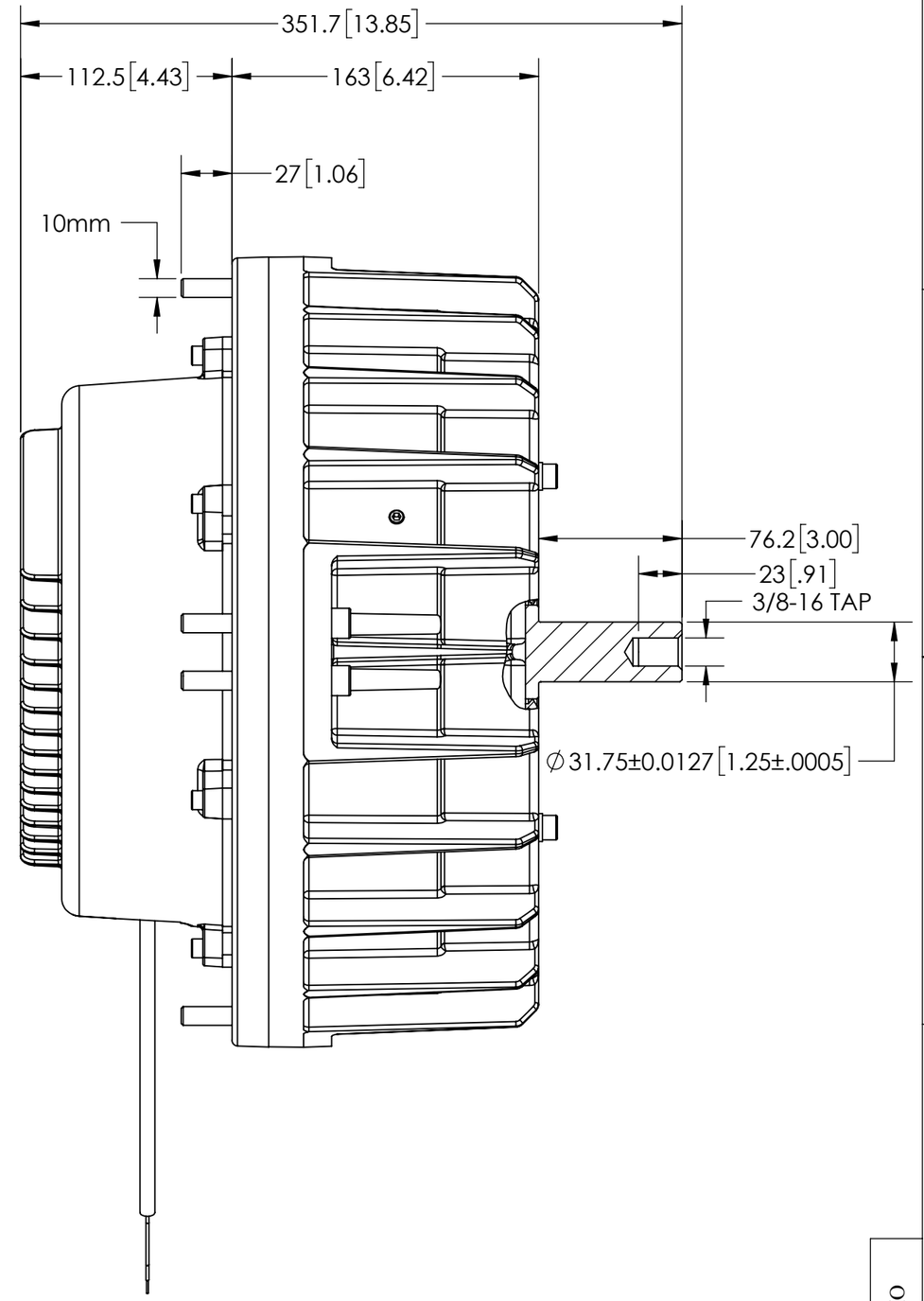

CUSTOMER IS RESPONSIBLE FOR DETERMINING THAT THE PRODUCT WILL PERFORM SUITABLY IN THE INTENDED APPLICATION

REV. DESC: NEW			
REV: -	VERSION: 00	REVISED: 10:42:21 01/30/2024	TDR: 000001219757
MODEL NO. OM3001A05			REF: -
BY: ENMARS0			B

ABB Inc.®

MOTOINVERTER BL360 H60

OM3001A05