37LYJ019

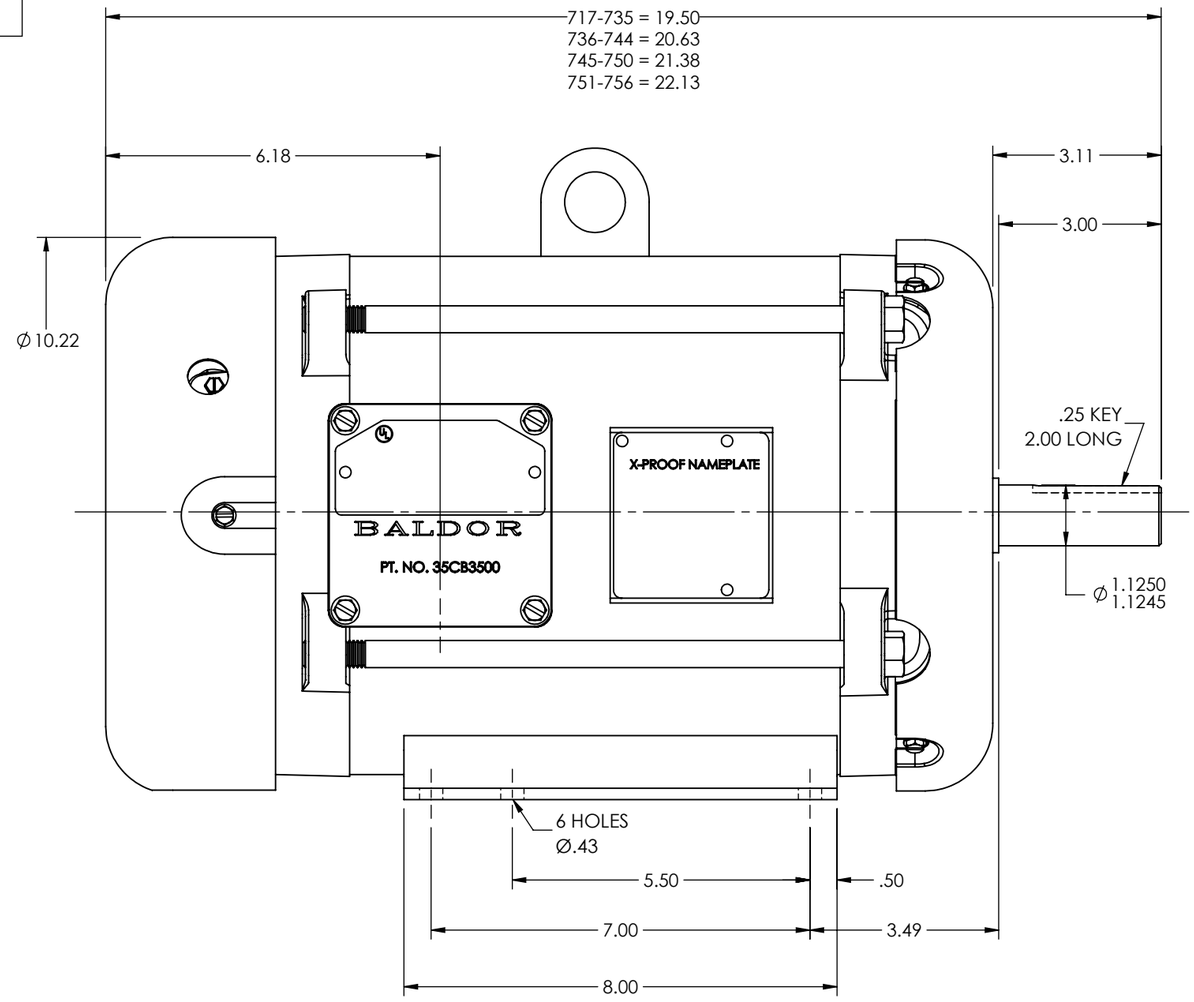

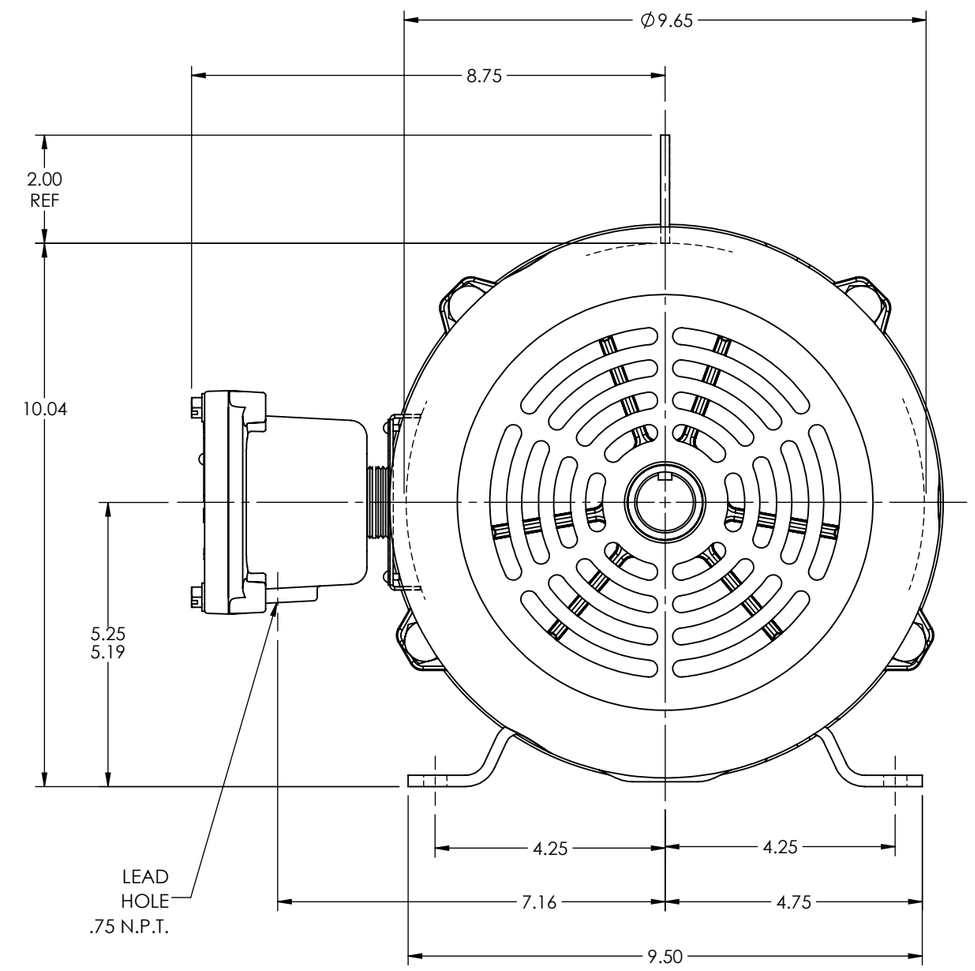

CUSTOMER IS RESPONSIBLE FOR DETERMINING THAT THE PRODUCT WILL PERFORM SUITABLY IN THE INTENDED APPLICATION

REV. DESC: CONVERSION OF ACAD TO SWD INOPC PKG 19			
REV: G	VERSION: 02	REVISED: 11:17:04 10/11/2022	TDR: 000001197758
MODEL NO. 37LYJ019			REF: -
BY: ENALEM0			B

BALDOR - RELIANCE®

STD HOR 213-5 XPFC 37L DUAL CLASS, W/DBL FAN

37LYJ019