ABB BALDOR RELIANCE

# Customer information packet

## L5009A

1HP, 3450RPM, 1PH, 60HZ, 56, X3524L, XPFC, F1
Class - CLI GP D; CLII GP F,G
Division - Division I

Copyright © All product information within this document is subject to ABB Motors and Mechanical Inc. copyright © protection, unless otherwise noted.
11/24/2026 6:13:21 PM

## Specifications

| | |
|---|---|
| **Enclosure** | XPFC |
| **Frame** | 56 |
| **Frame Material** | Steel |
| **Frequency** | 60.00 Hz |
| **Haz Area Class and Group** | CLI GP D; CLII GP F,G |
| **Haz Area Division** | Division I |
| **Motor Letter Type** | Cap Start, Induction Run |
| **Output @ Frequency** | 1.000 HP @ 60 HZ |
| **Phase** | 1 |
| **Synchronous Speed @ Frequency** | 3600 RPM @ 60 HZ |
| **Voltage @ Frequency** | 115.0 V @ 60 HZ |
| | 230.0 V @ 60 HZ |
| **Agency Approvals** | UR |
| | UL |
| | CSA |
| **Ambient Temperature** | 40 °C |
| **Auxiliary Box** | NO AUXILLARY BOX |
| **Auxiliary Box Lead Termination** | None |
| **Base Indicator** | Rigid |
| **Bearing Grease Type** | Polyrex EM (-20F +300F) |
| **Blower** | None |
| **Current @ Voltage** | 12.000 A @ 115.0 V |
| | 6.000 A @ 230.0 V |
| **Design Code** | N |
| **Drip Cover** | No Drip Cover |
| **Duty Rating** | CONT |
| **Efficiency @ 100% Load** | 66.0 % |
| **Electrically Isolated Bearing** | Not Electrically Isolated |
| **Feedback Device** | NO FEEDBACK |
| **Front Face Code** | Standard |
| **Front Shaft Indicator** | None |
| **Haz Area Temp Code** | T4 |

## Part Detail

| | |
|---|---|
| **Revision** | BU |
| **Type** | AC |
| **Mech. spec.** | 35E353 |
| **Base** | |
| **Status** | PRD/A |
| **Elec. spec.** | 35WG0498 |
| **Layout** | 35LYE353 |
| **Eff. date** | 03-06-2026 |
| **CD Diagram** | CD0008 |
| **Poles** | 02 |
| **Leads** | 4#16 A&J,2#18 B PH,1#14 #4TH |
| **Proprietary** | False |
| **Created date** | 06-27-2007 |

| | |
|---|---|
| **Heater Indicator** | No Heater |
| **High Voltage Full Load Amps** | 6.0 a |
| **Insulation Class** | B |
| **Inverter Code** | Not Inverter |
| **KVA Code** | K |
| **Lifting Lugs** | No Lifting Lugs |
| **Locked Bearing Indicator** | No Locked Bearing |
| **Motor Lead Exit** | Ko Box |
| **Motor Lead Quantity/Wire Size** | 4 @ 16 AWG, A&J |
| **Motor Lead Termination** | Flying Leads |
| **Motor Standards** | NEMA |
| **Motor Type** | 3524L |
| **Mounting Arrangement** | F1 |
| **Number of Poles** | 2 |
| **Overall Length** | 15.17 IN |
| **Power Factor** | 81 |
| **Product Family** | General Purpose |
| **Pulley End Bearing Type** | Ball |
| **Pulley Face Code** | Standard |
| **Pulley Shaft Indicator** | Standard |
| **Rodent Screen** | None |
| **RoHS Status** | ROHS COMPLIANT |
| **Service Factor** | 1.00 |
| **Shaft Diameter** | 0.625 IN |
| **Shaft Extension Location** | Pulley End |
| **Shaft Ground Indicator** | No Shaft Grounding |
| **Shaft Rotation** | Reversible |
| **Shaft Slinger Indicator** | No Slinger |
| **Speed** | 3450 rpm |
| **Speed Code** | Single Speed |
| **Starting Method** | Direct on line |
| **Thermal Device - Bearing** | None |
| **Thermal Device - Winding** | None |
| **Vibration Sensor Indicator** | No Vibration Sensor |

| | |
|---|---|
| **Winding Thermal 1** | Automatic Thermal Overload |
| **Winding Thermal 1 Location** | SB |
| **Winding Thermal 2** | None |

**Nameplate**

| NP0016XPSL | | | | | | | |
|---|---|---|---|---|---|---|---|
| **NO.** | | **CC** | | | | | |
| **SER. #** | | | | | | | |
| **SPEC** | 35E353-498 | | | | | | |
| **CAT.NO.** | L5009A | | | | | | |
| **H.P.** | 1 | **T. CODE** | T4 | | | | |
| **VOLTS** | 115/230 | | | | | | |
| **AMPS** | 12/6 | | | | | | |
| **R.P.M.** | 3450 | | | | | | |
| **HZ** | 60 | **PH** | 1 | **CLASS** | B | | |
| **SER.F.** | 1.00 | **DES** | N | **CODE** | K | | |
| **RATING** | 40C AMB-CONT | | | | | | |
| **FRAME** | 56 | **NEMA NOM. EFF** | | | 66 | | |
| | **PF** | 81 | | | | | |
| **BLANK** | | | | | | | |

**AC Induction Motor Performance Data**
Record # 30814
Typical performance - not guaranteed values

| **Winding:** 35WG0498-R002 | **Type:** 3524L | **Enclosure:** XPFC |
|---|---|---|

| **Nameplate Data** | | | | **230 V, 60 Hz: High Voltage Connection** | |
|---|---|---|---|---|---|
| **Rated Output (HP)** | | | 1 | **Full Load Torque** | 1.51 LB-FT |
| **Volts** | | | 115/230 | **Start Configuration** | direct on line |
| **Full Load Amps** | | | 12/6 | **Breakdown Torque** | 4.97 LB-FT |
| **R.P.M.** | | | 3450 | **Pull-up Torque** | 2.74 LB-FT |
| **Hz** | 60 | **Phase** | 1 | **Locked-rotor Torque** | 4.24 LB-FT |
| **NEMA Design Code** | N | **KVA Code** | K | **Starting Current** | 37.9 A |
| **Service Factor (S.F.)** | | | 1 | **No-load Current** | 2.95 A |
| **NEMA Nom. Eff.** | 66 | **Power Factor** | 81 | **Line-line Res. @ 25ºC** | 2.572 Ω A Ph<br>1.8019 Ω B Ph |
| **Rating - Duty** | | | 40C AMB-CONT | **Temp. Rise @ Rated Load** | 49°C |

**Load Characteristics 230 V, 60 Hz, 1 HP**

| **% of Rated Load** | **25** | **50** | **75** | **100** | **125** | **150** |
|---|---|---|---|---|---|---|
| **Power Factor** | 51 | 66 | 76 | 82 | 85 | 88 |
| **Efficiency** | 48.2 | 63.2 | 68.3 | 70.6 | 70.1 | 68 |
| **Speed** | 3563.8 | 3541.1 | 3515.3 | 3483.1 | 3445.7 | 3401.4 |
| **Line amperes** | 3.28 | 3.83 | 4.58 | 5.59 | 6.75 | 8.09 |

ABB Motors and Mechanical Inc.

WINDING # 35WG0498

1 HP 1 PH 60 HZ 3450 RPM 230 V 3524L

Typical performance - not guaranteed values.

TORQUES(LB-FT): PO=4.97 PU=2.74 LR=4.24 LRA=37.9

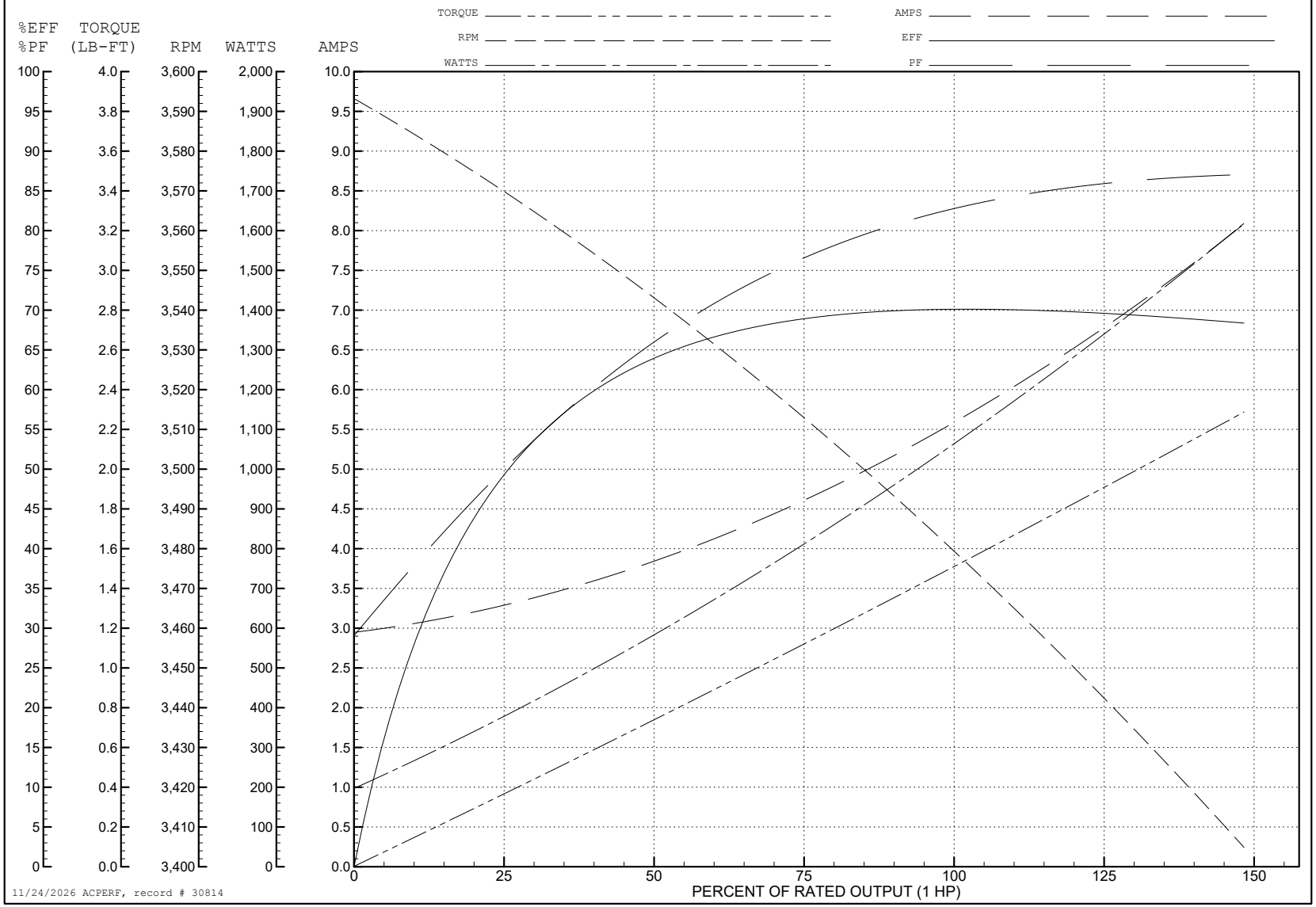


11/24/2026 ACPERF, record # 30814

**AC Induction Motor Performance Data**
Record # 59849
Typical performance - not guaranteed values

| **Winding:** 35WG0498-R002 | **Type:** 3524L | **Enclosure:** XPFC |
|---|---|---|

| **Nameplate Data** | | | | **115 V, 60 Hz: Low Voltage Connection** | |
|---|---|---|---|---|---|
| **Rated Output (HP)** | | | 1 | **Full Load Torque** | 1.51 LB-FT |
| **Volts** | | | 115/230 | **Start Configuration** | direct on line |
| **Full Load Amps** | | | 12/6 | **Breakdown Torque** | 4.97 LB-FT |
| **R.P.M.** | | | 3450 | **Pull-up Torque** | 2.74 LB-FT |
| **Hz** | 60 | **Phase** | 1 | **Locked-rotor Torque** | 4.24 LB-FT |
| **NEMA Design Code** | N | **KVA Code** | K | **Starting Current** | 75.8 A |
| **Service Factor (S.F.)** | | | 1 | **No-load Current** | 5.9 A |
| **NEMA Nom. Eff.** | 66 | **Power Factor** | 81 | **Line-line Res. @ 25ºC** | 0.643 Ω A Ph<br>1.8019 Ω B Ph |
| **Rating - Duty** | | | 40C AMB-CONT | **Temp. Rise @ Rated Load** | 49°C |

**Load Characteristics 115 V, 60 Hz, 1 HP**

| **% of Rated Load** | **25** | **50** | **75** | **100** | **125** | **150** |
|---|---|---|---|---|---|---|
| **Power Factor** | 51 | 66 | 76 | 82 | 85 | 88 |
| **Efficiency** | 48.2 | 63.2 | 68.3 | 70.6 | 70.1 | 68 |
| **Speed** | 3563.8 | 3541.1 | 3515.3 | 3483.1 | 3445.7 | 3401.4 |
| **Line amperes** | 6.56 | 7.66 | 9.16 | 11.18 | 13.5 | 16.18 |

ABB Motors and Mechanical Inc.

WINDING # 35WG0498

1 HP 1 PH 60 HZ 3450 RPM 115 V 3524L

Typical performance - not guaranteed values.

TORQUES(LB-FT): PO=4.97 PU=2.74 LR=4.24 LRA=75.8

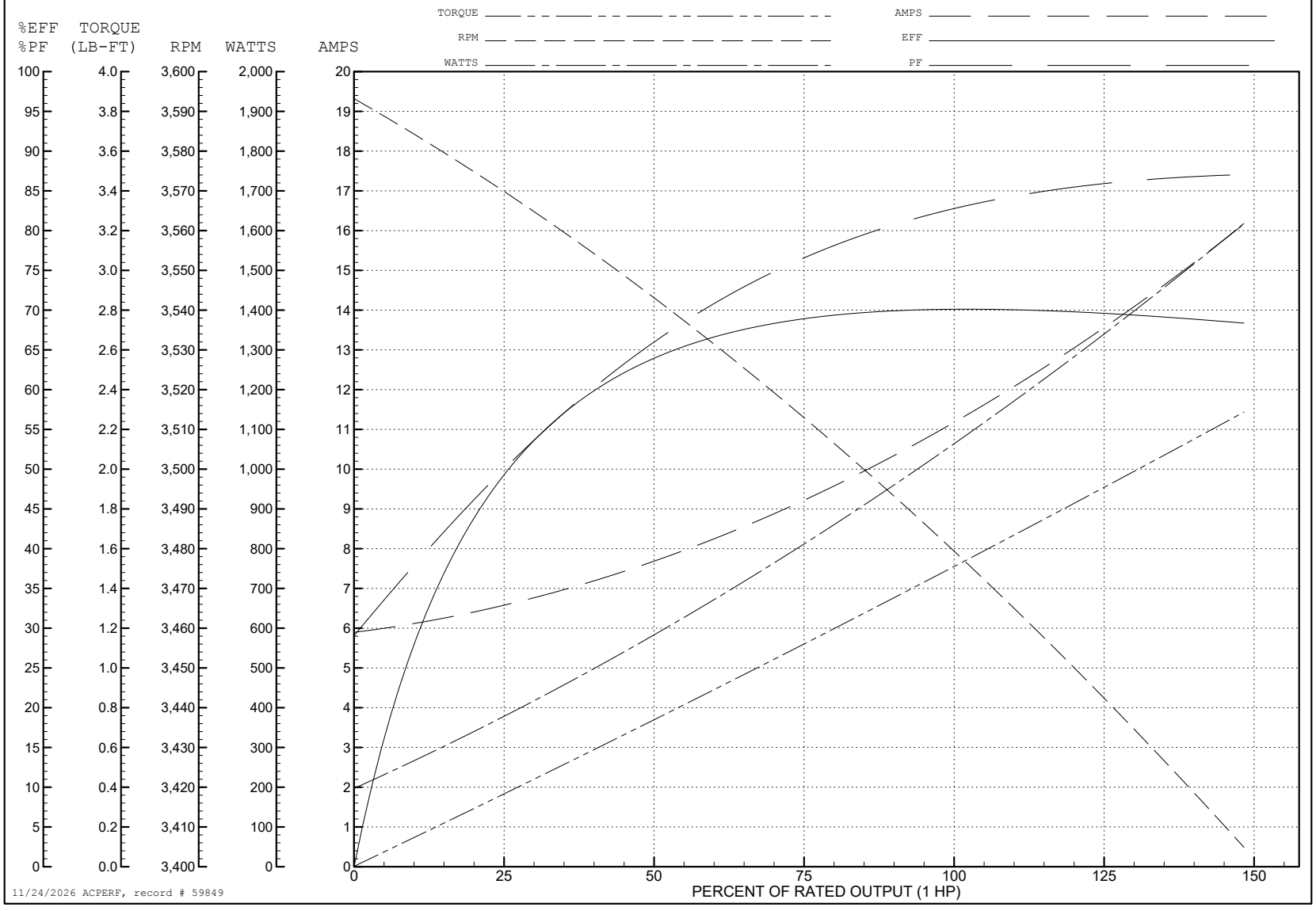


11/24/2026 ACPERF, record # 59849

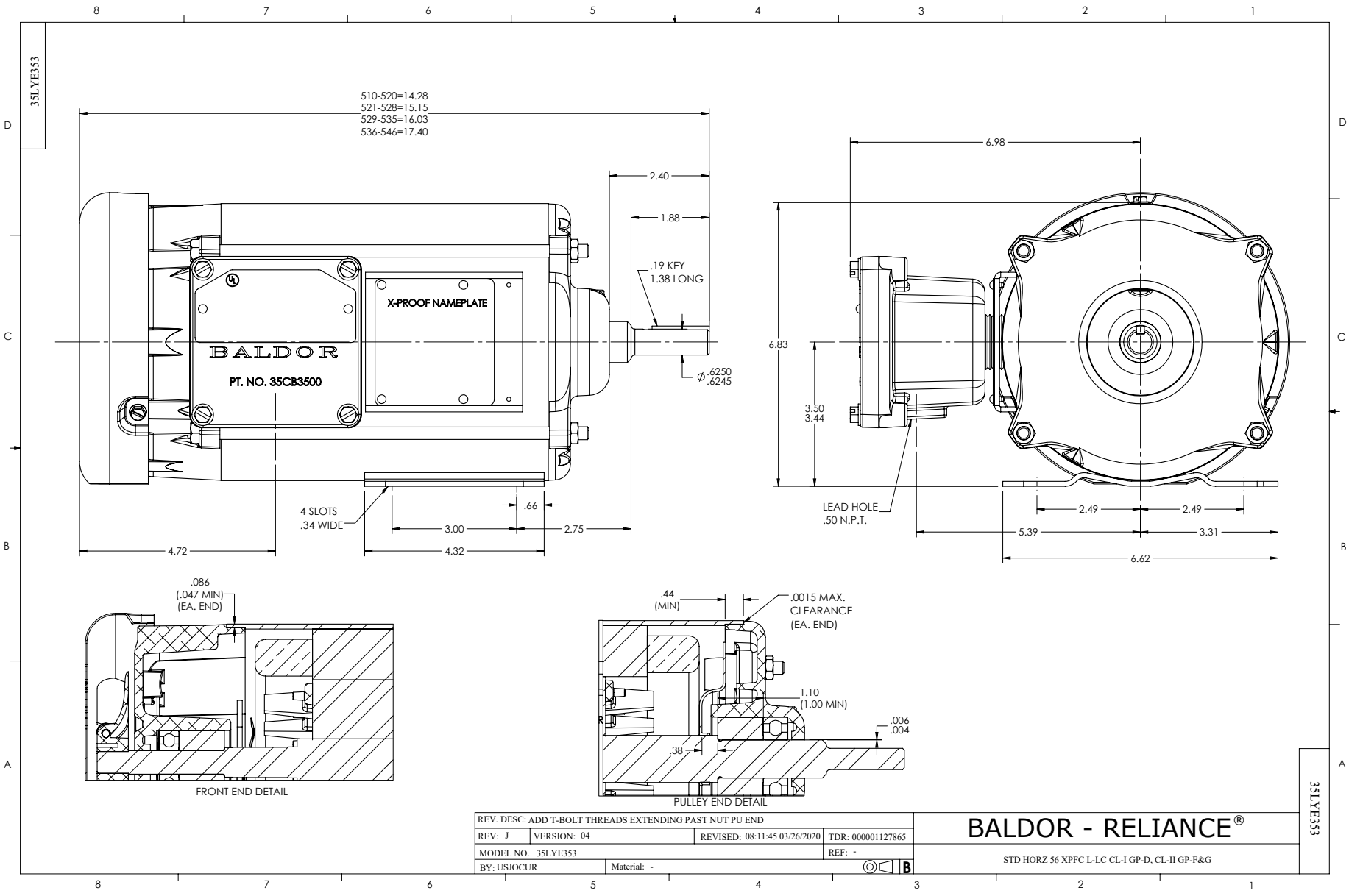
35LYE353
510-520=14.28
521-528=15.15
529-535=16.03
536-546=17.40
2.40
1.88
.19 KEY
1.38 LONG
X-PROOF NAMEPLATE
BALDOR
PT. NO. 35CB3500
Ø .6250
.6245
4 SLOTS
.34 WIDE
.66
3.00
2.75
4.72
4.32
6.98
6.83
3.50
3.44
LEAD HOLE
.50 N.P.T.
2.49
2.49
5.39
3.31
6.62
.086
(.047 MIN)
(EA. END)
FRONT END DETAIL
.44
(MIN)
.0015 MAX.
CLEARANCE
(EA. END)
1.10
(1.00 MIN)
.006
.004
.38
PULLEY END DETAIL
REV. DESC: ADD T-BOLT THREADS EXTENDING PAST NUT PU END
REV: J
VERSION: 04
REVISED: 08:11:45 03/26/2020
TDR: 000001127865
MODEL NO. 35LYE353
REF: -
BY: USJOCUR
Material: -
B
BALDOR - RELIANCE®
STD HORZ 56 XPFC L-LC CL-I GP-D, CL-II GP-F&G
35LYE353

CD0008

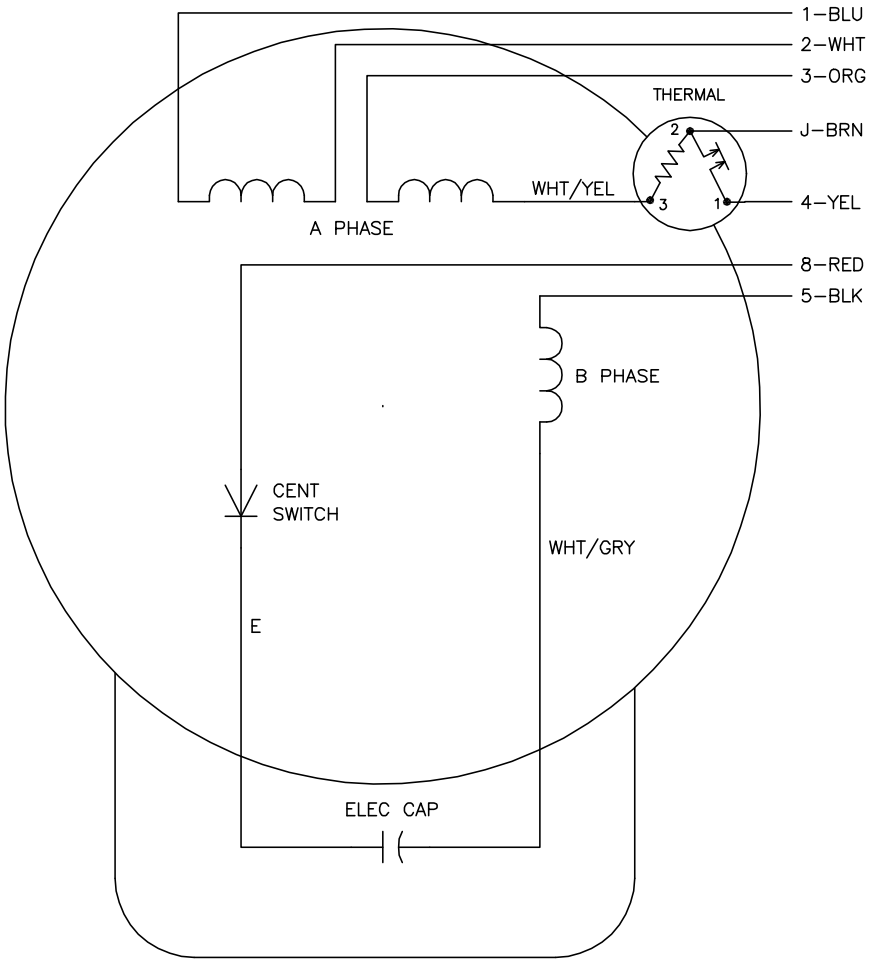


| | LINE A | LINE B | JOIN | JOIN |
|---|---|---|---|---|
| HIGH STD | 1 | 4 | 2,3,8 | J,5 |
| HIGH OPP | 1 | 4 | 2,3,5 | J,8 |
| LOW STD | 1,3,8 | 4 | – | 2,J,5 |
| LOW OPP | 1,3,5 | 4 | – | 2,J,8 |

NOTES:

1. STANDARD ROTATION IS CCW FACING END OPPOSITE SHAFT EXTENSION.
2. MULTIPLE CAPACITORS ARE CONNECTED IN PARALLEL UNLESS OTHERWISE SPECIFIED.
3. LEAD COLORS ARE OPTIONAL. LEADS MUST ALWAYS BE NUMBERED AS SHOWN.

CD0008

| | | | |
|---|---|---|---|
| REV. DESC: REMOVE 2–TERMINAL THERMAL DETAIL, SEE CD0008A02 | | | BALDOR ELECTRIC Co. |
| REV. LTR: F | VERSION: 01 | TDR: 000000360649 | |
| CD0008 | FILE: \AAA\00007\408 | REVISED: 10:56:54 04/18/2005 | TYPE L, DV, REV, THERMAL, 7 LEADS |
| | MTL: – | BY: ENJOEP0 | |