35LYHH612

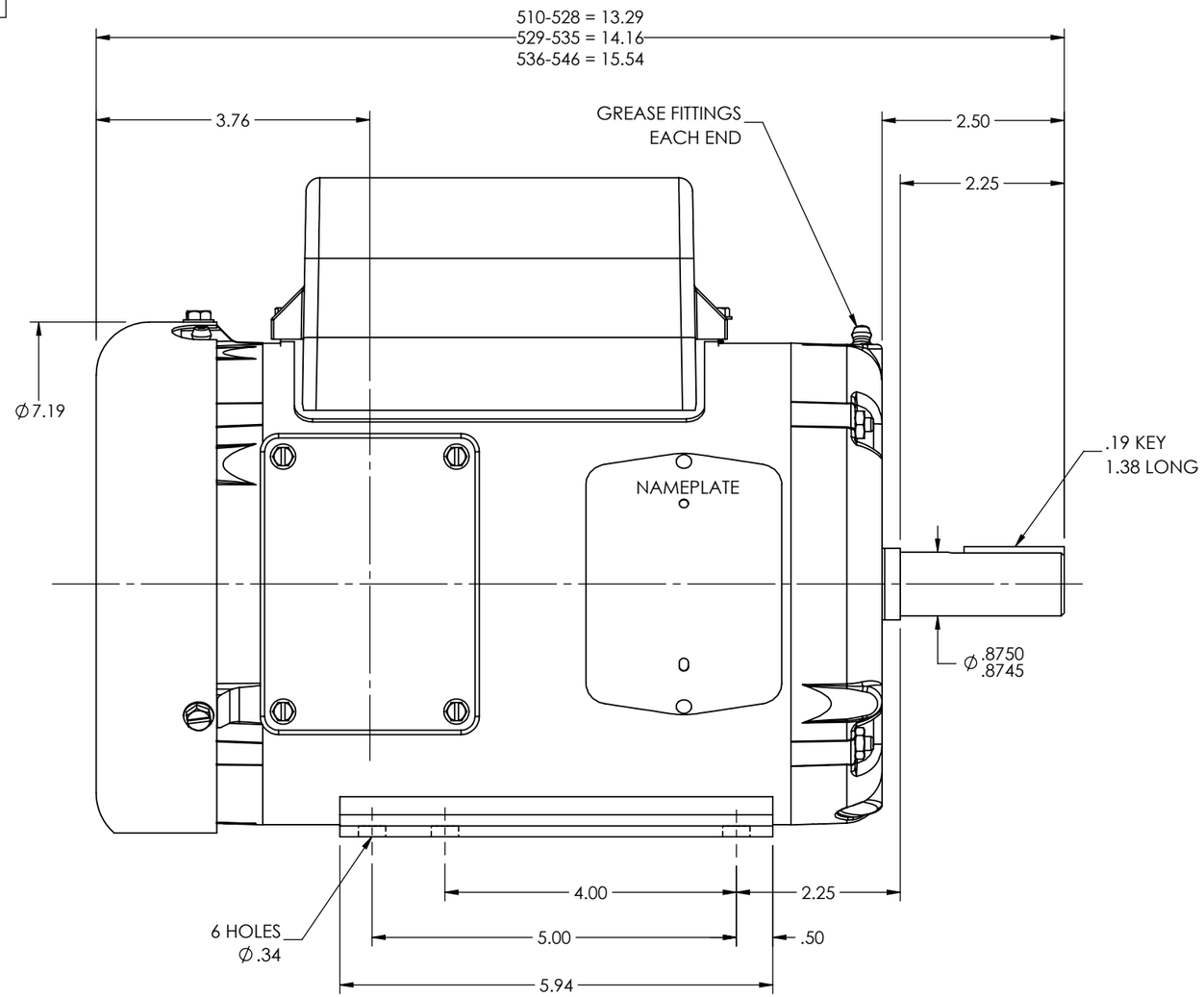

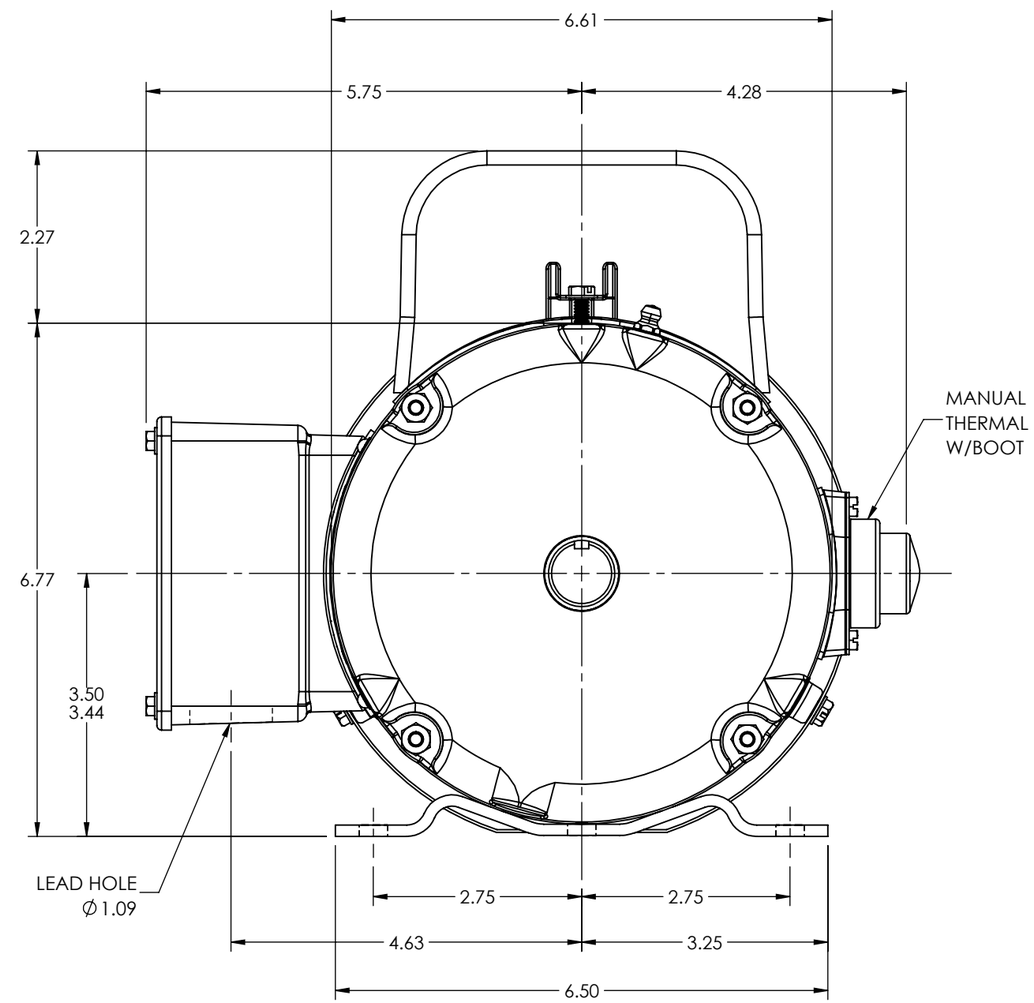

CUSTOMER IS RESPONSIBLE FOR DETERMINING THAT THE PRODUCT WILL PERFORM SUITABLY IN THE INTENDED APPLICATION

REV. DESC: UPDATE 3D MODEL BOM PER REV C, NO CHG TO 2D PRINT			
REV: C	VERSION: 03	REVISED: 08:50:58 03/28/2022	TDR: 000001187751
MODEL NO. 35LYHH612			REF: -
BY: USBUFRA			B

BALDOR - RELIANCE®

STD HORZ 143-5T TEFC 35LC W/1" MTO & 1.09 DIA. LEAD HOLE

SH 1 OF 1

35LYHH612