35LYH611

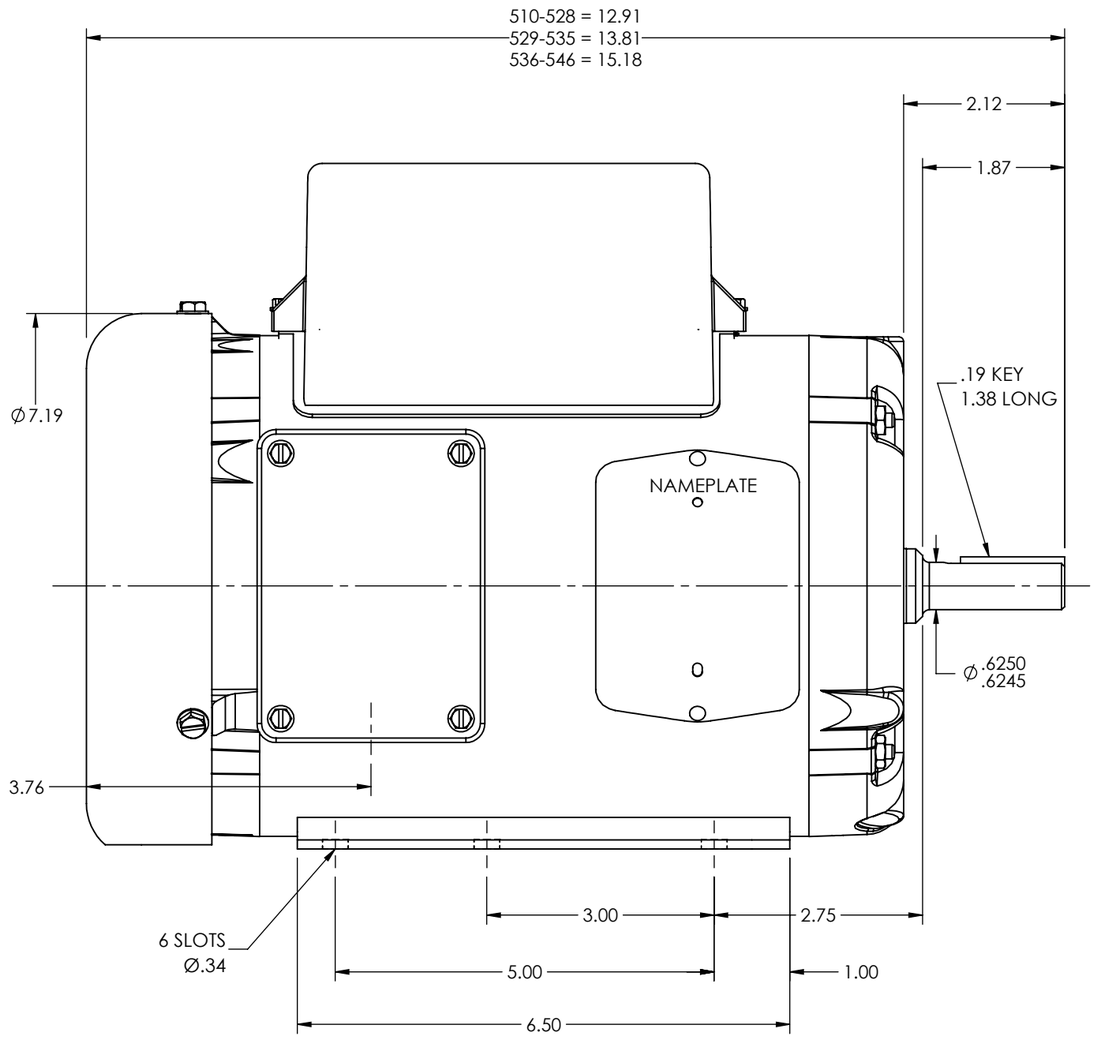

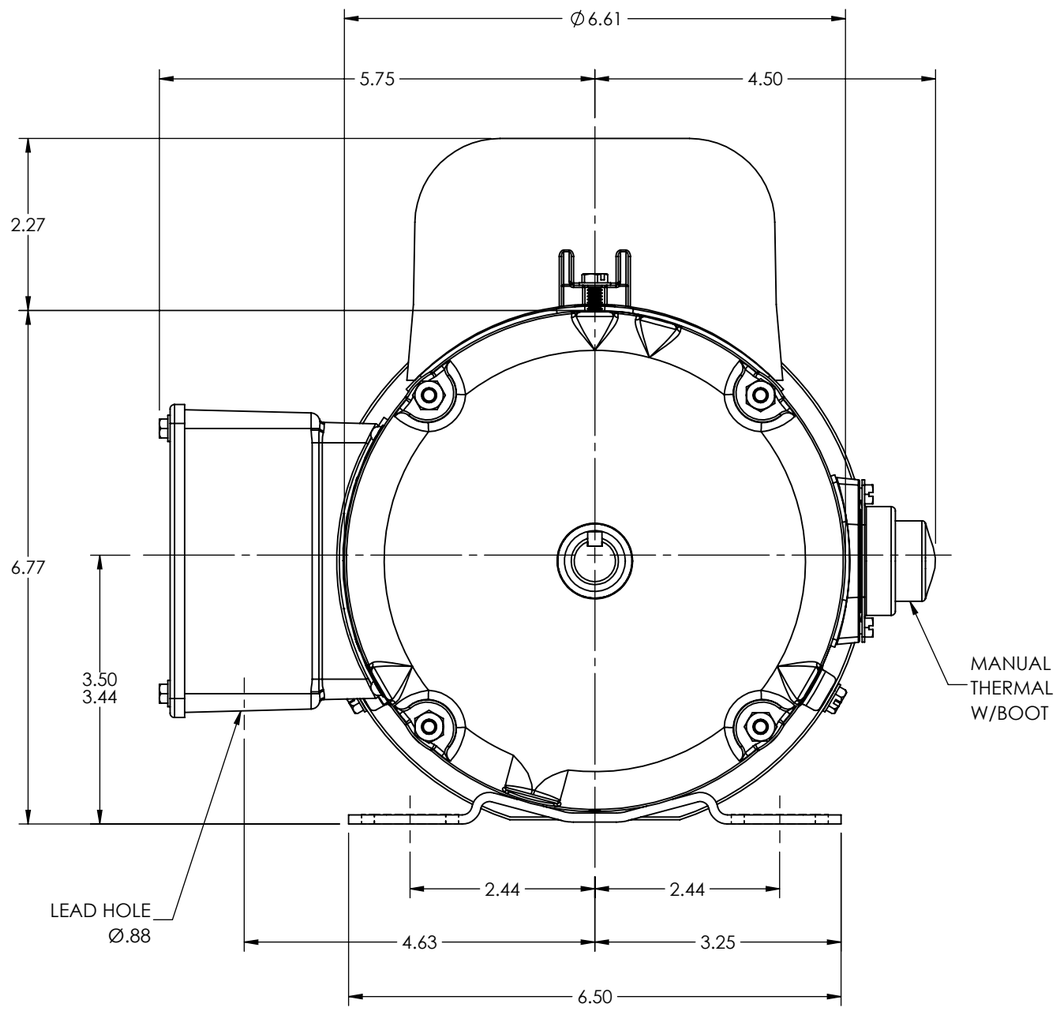

CUSTOMER IS RESPONSIBLE FOR DETERMINING THAT THE PRODUCT WILL PERFORM SUITABLY IN THE INTENDED APPLICATION

REV. DESC: UPDATE 3D MODEL BOM PER REV AB, NO CHG TO 2D PRINT			
REV: L	VERSION: 03	REVISED: 01:33:12 04/06/2022	TDR: 000001188385
MODEL NO. 35LYH611			REF: -
BY: USBUFRA			B

BALDOR - RELIANCE®

STD HORZ 56/56H TEFC 35LC W/1"MTO
SH 1 OF 1

35LYH611