35LYJ385

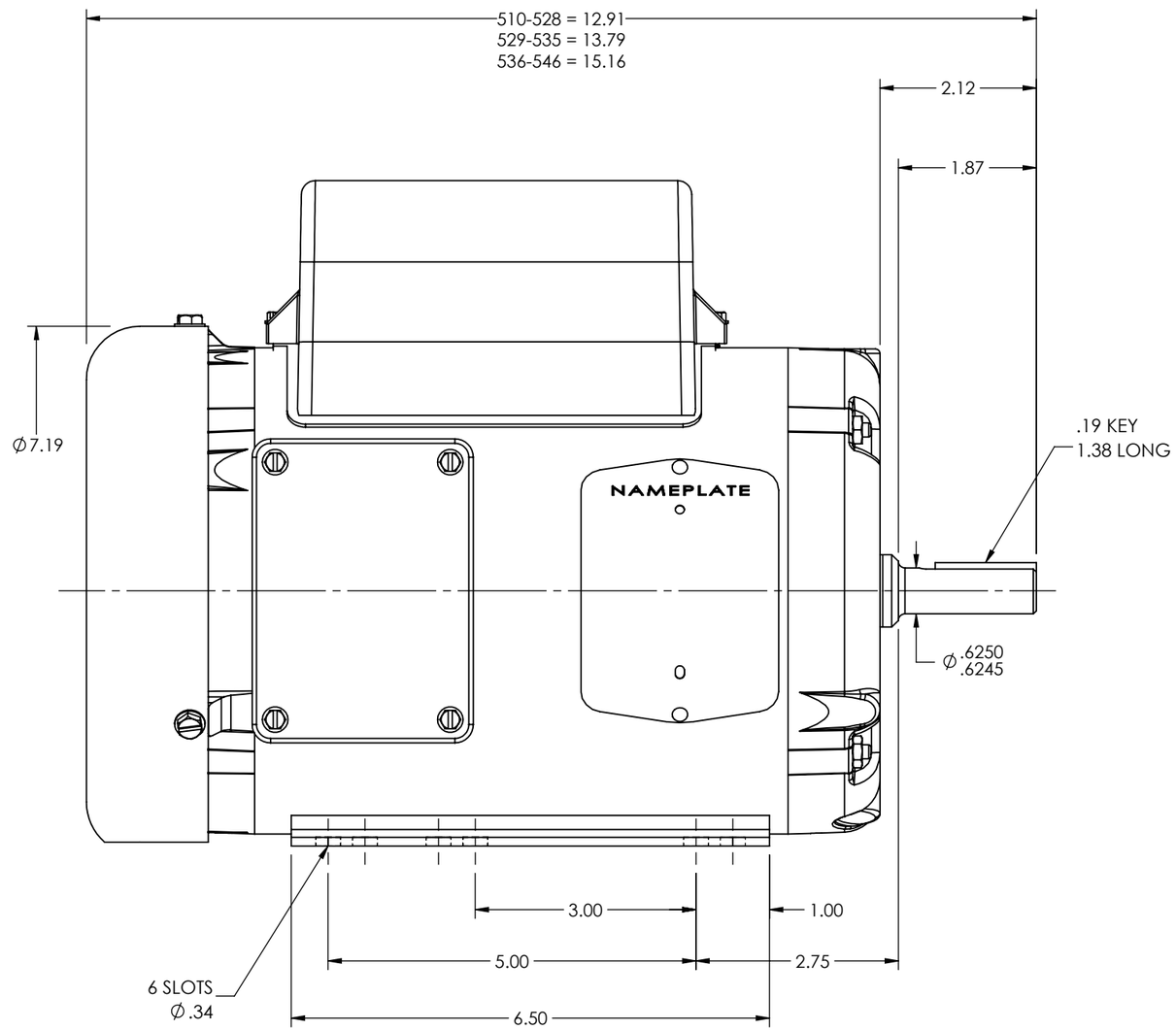

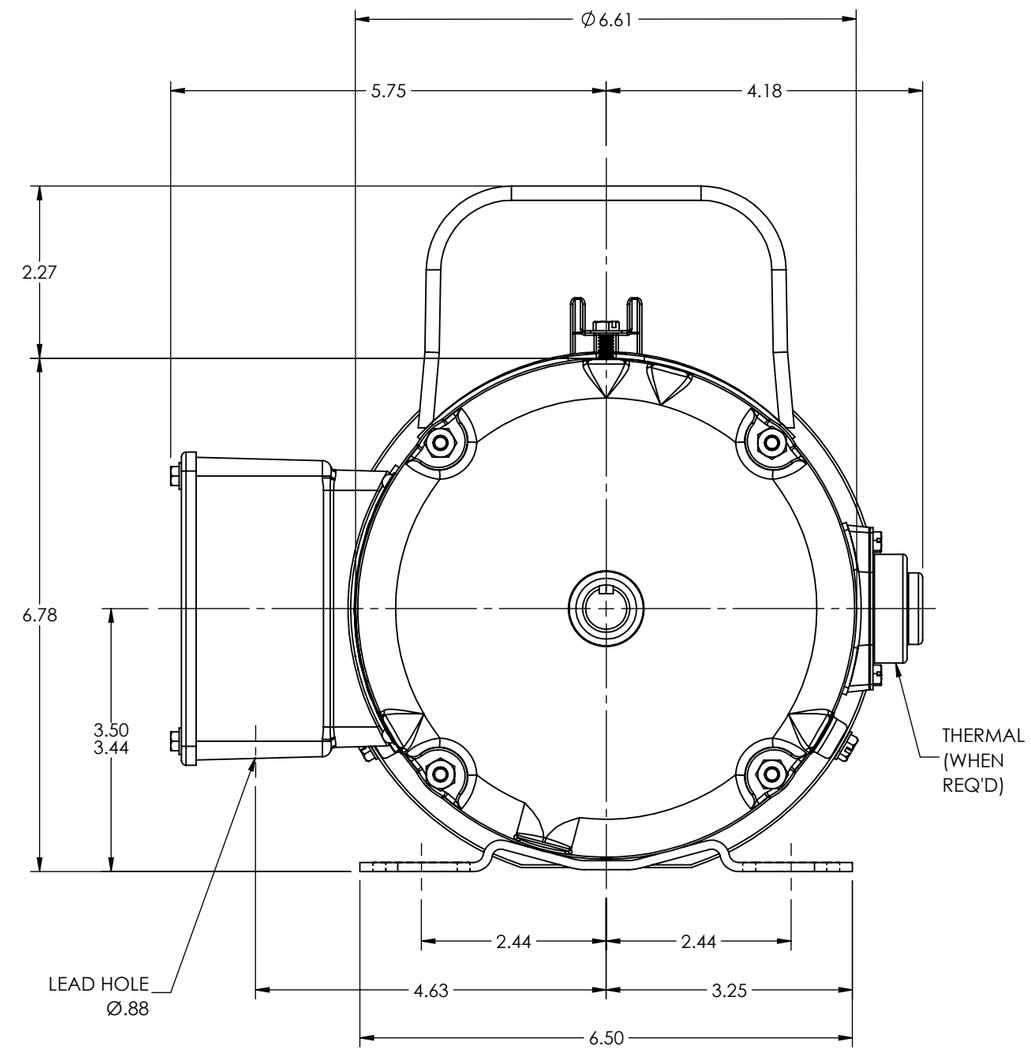

CUSTOMER IS RESPONSIBLE FOR DETERMINING THAT THE PRODUCT WILL PERFORM SUITABLY IN THE INTENDED APPLICATION

REV. DESC: ADD THERMAL DIMS AND THERMAL WHEN REQUIRED NOTE			
REV: L	VERSION: 04	REVISED: 09:42:49 03/30/2023	TDR: 000001205626
MODEL NO. 35LYJ385			REF: -
BY: USBUFRA			B

BALDOR - RELIANCE®

STD HORZ 56/56H TEFC 35LC

SH 1 OF 1

35LYJ385