35LYJ527

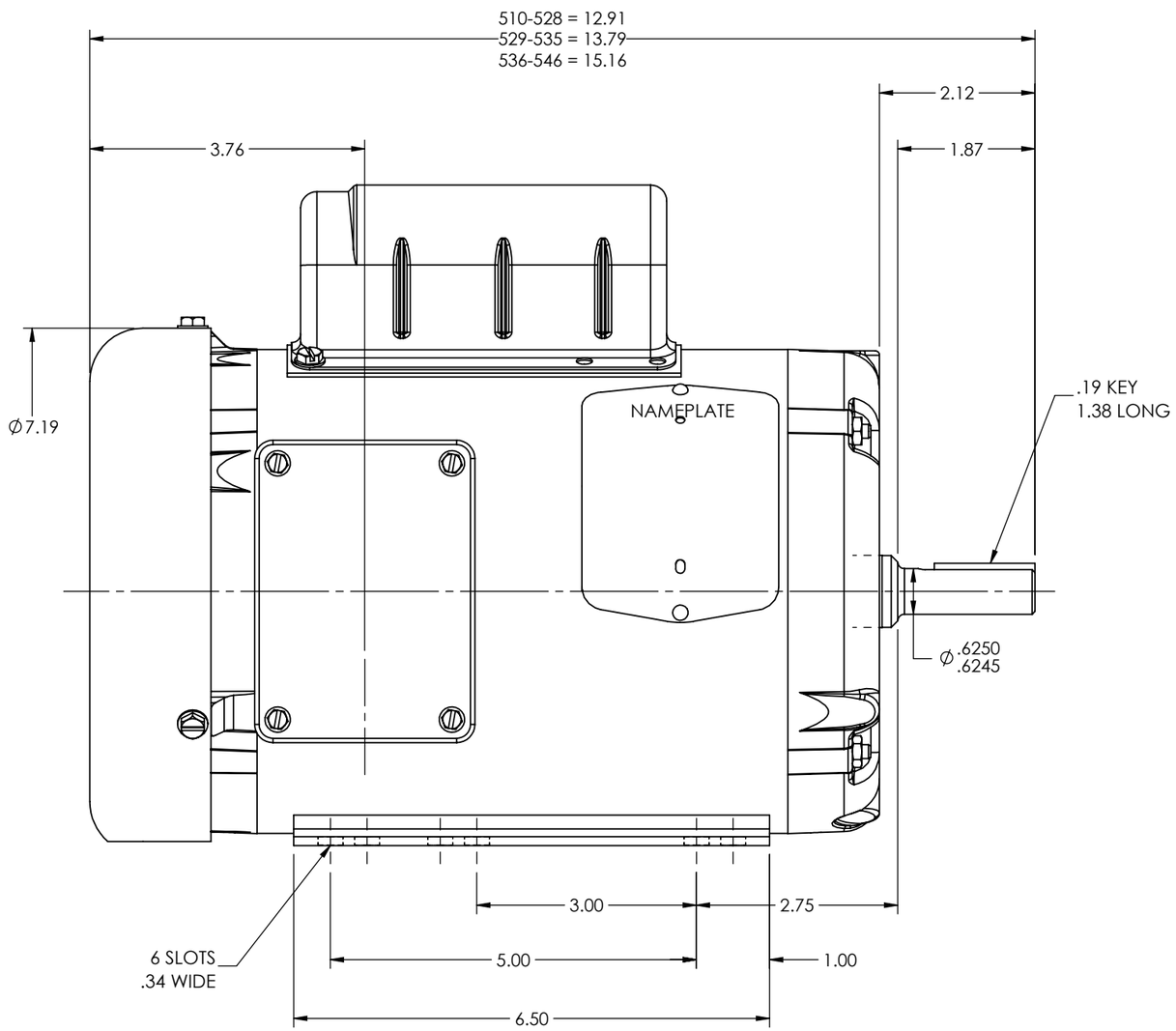

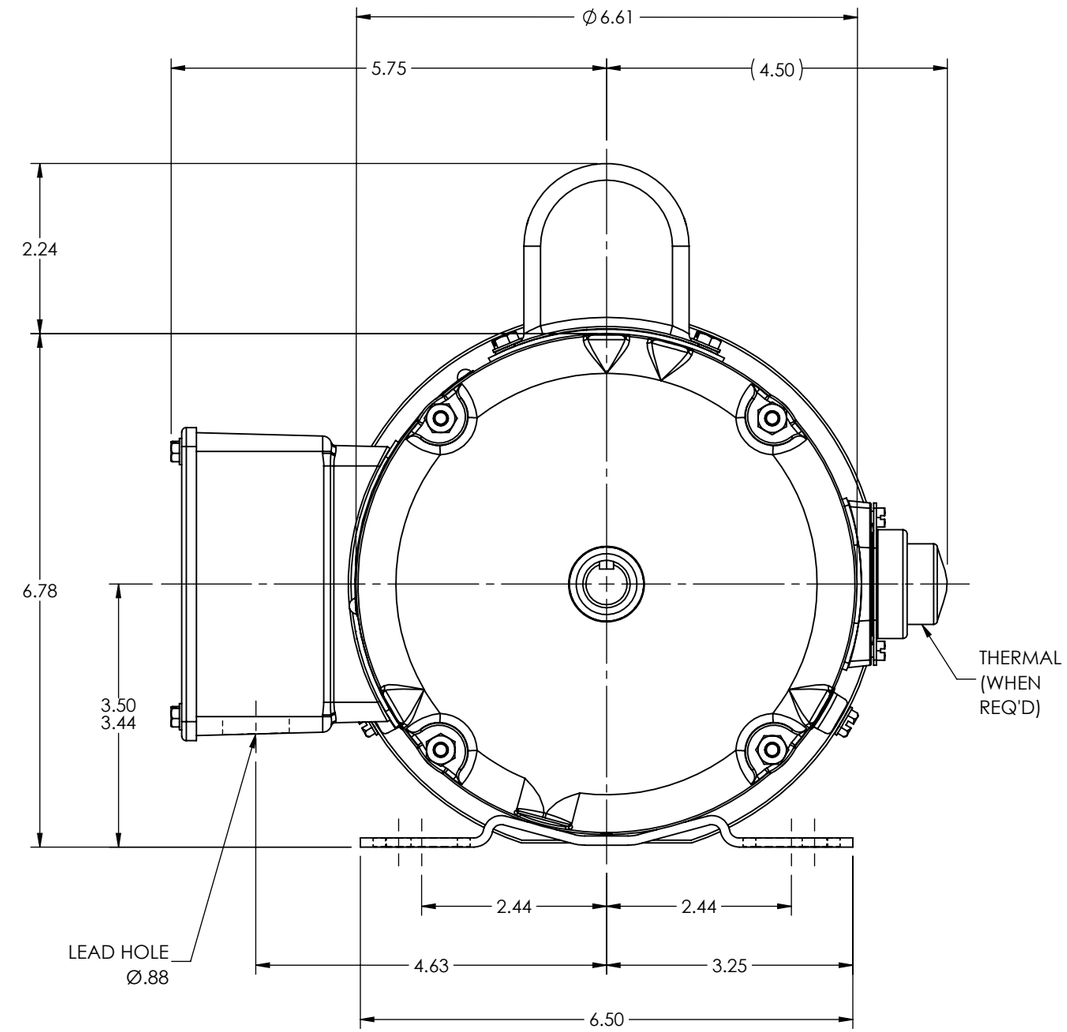

CUSTOMER IS RESPONSIBLE FOR DETERMINING THAT THE PRODUCT WILL PERFORM SUITABLY IN THE INTENDED APPLICATION

REV. DESC: UPDATE 3D MODEL BOM PER REV X, NO CHG TO 2D PRINT			
REV: M	VERSION: 05	REVISED: 12:46:10 04/06/2022	TDR: 000001188385
MODEL NO. 35LYJ527			REF: -
BY: USBUFRA			B

BALDOR - RELIANCE®

STD HORZ NEMA 56/56H TEFC 35L
SH 1 OF 1

35LYJ527