35LYE008

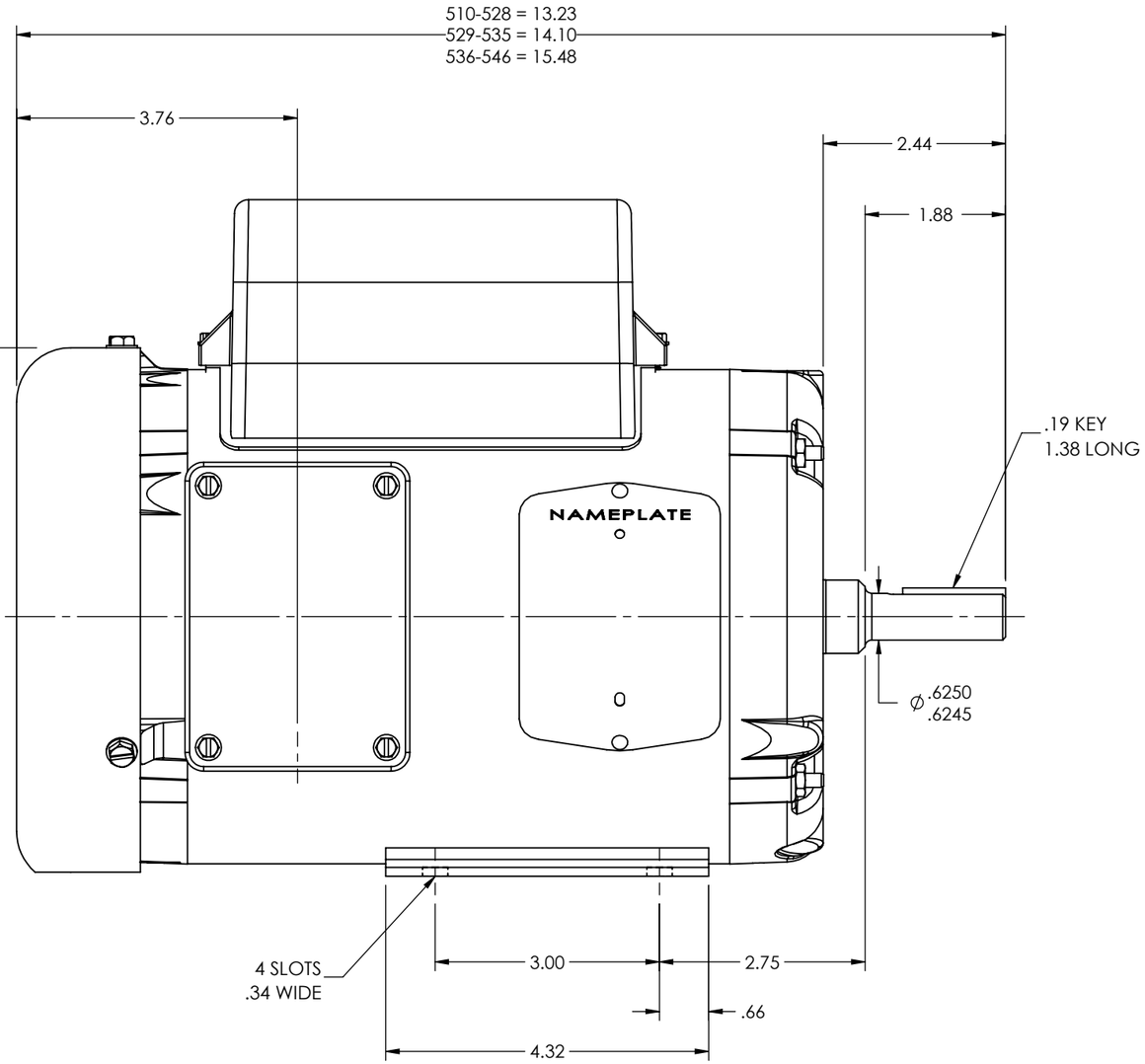

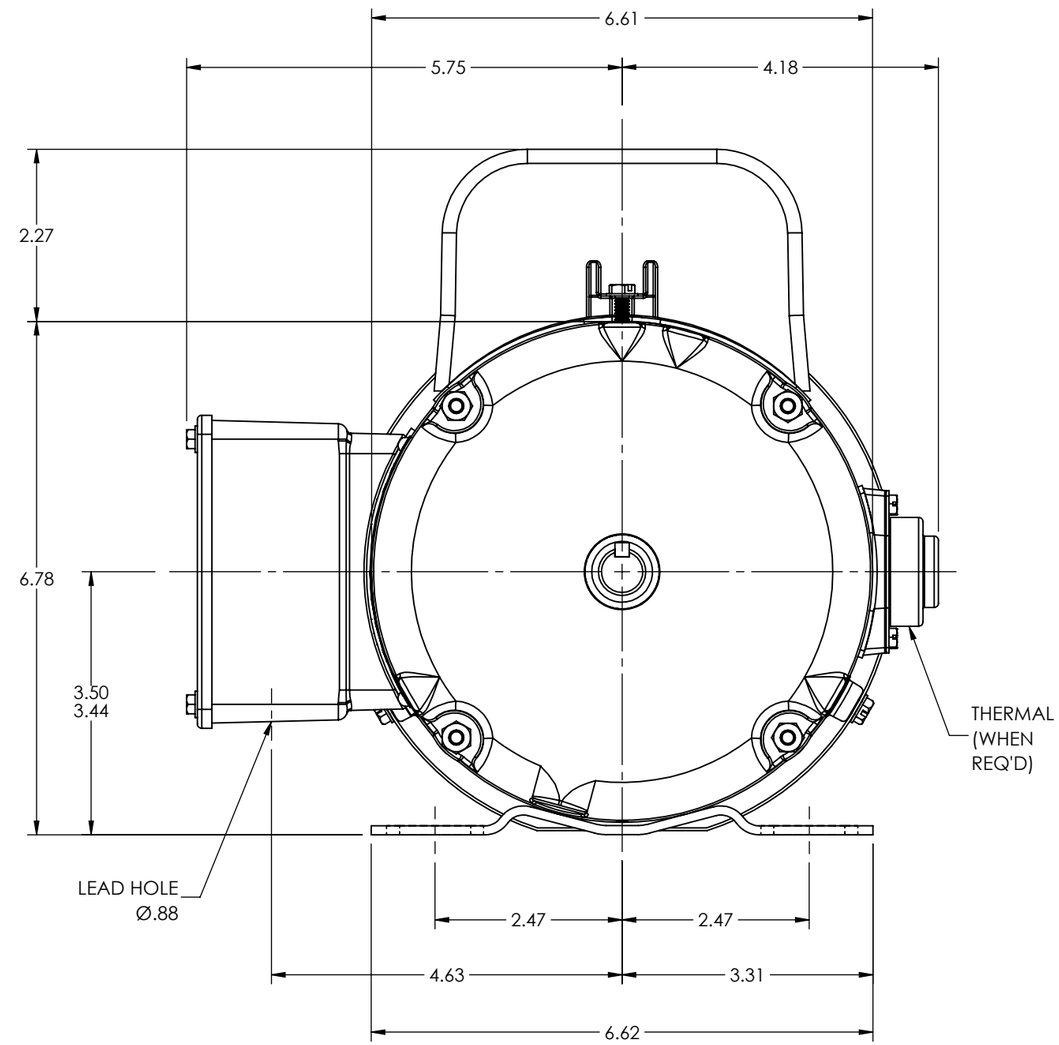

CUSTOMER IS RESPONSIBLE FOR DETERMINING THAT THE PRODUCT WILL PERFORM SUITABLY IN THE INTENDED APPLICATION

REV. DESC: ADD THERMAL DIMS AND THERMAL WHEN REQUIRED NOTE			
REV: R	VERSION: 09	REVISED: 01:37:11 03/13/2023	TDR: 000001205626
MODEL NO. 35LYE008			REF: -
BY: USBUFRA			B

BALDOR - RELIANCE®

STD HORZ 56 TEFC 35LC
SH 1 of 1

35LYE008