ABB BALDOR RELIANCE

Customer information packet

L3355

.17HP, 1725RPM, 1PH, 60HZ, 42, 3316L, TEFC, F1

Copyright © All product information within this document is subject to ABB Motors and Mechanical Inc. copyright © protection, unless otherwise noted.
11/24/2026 1:15:00 AM

Specifications

Enclosure	TEFC
Frame	42
Frame Material	Steel
Frequency	60.00 Hz
Motor Letter Type	Cap Start, Induction Run
Output @ Frequency	.170 HP @ 60 HZ
Phase	1
Synchronous Speed @ Frequency	1800 RPM @ 60 HZ
Voltage @ Frequency	230.0 V @ 60 HZ
	115.0 V @ 60 HZ
Agency Approvals	C UR US
	CURUS
Ambient Temperature	40 °C
Auxiliary Box	NO AUXILLARY BOX
Auxiliary Box Lead Termination	None
Base Indicator	Rigid
Bearing Grease Type	Polyrex EM (-20F +300F)
Blower	None
Current @ Voltage	1.800 A @ 230.0 V
	2.000 A @ 208.0 V
	3.600 A @ 115.0 V
Design Code	N
Drip Cover	No Drip Cover
Duty Rating	CONT
Efficiency @ 100% Load	51.0 %
Electrically Isolated Bearing	Not Electrically Isolated
Feedback Device	NO FEEDBACK
Feedback Signal	NONE
Front Face Code	Standard
Front Shaft Indicator	None
Heater Indicator	No Heater
High Voltage Full Load Amps	1.8 a

Part Detail

Revision	AR
Type	AC
Mech. spec.	33-850
Base	
Status	PRD/A
Elec. spec.	33WG0918
Layout	33LY0850
Eff. date	10-24-2024
CD Diagram	CD0001A10
Poles	04
Leads	6#18
Proprietary	False
Created date	06-25-2007

Insulation Class	B
Inverter Code	Not Inverter
KVA Code	L
Lifting Lugs	No Lifting Lugs
Locked Bearing Indicator	No Locked Bearing
Motor Lead Exit	Ko Box
Motor Lead Quantity/Wire Size	6 @ 18 AWG
Motor Lead Termination	Flying Leads
Motor Standards	NEMA
Motor Type	3316L
Mounting Arrangement	F1
Number of Poles	4
Overall Length	9.56 IN
Power Factor	62
Product Family	General Purpose
Pulley End Bearing Type	Ball
Pulley Face Code	Standard
Pulley Shaft Indicator	Standard
Rodent Screen	None
RoHS Status	ROHS COMPLIANT
Service Factor	1.35
Shaft Diameter	0.375 IN
Shaft Extension Location	Pulley End
Shaft Ground Indicator	No Shaft Grounding
Shaft Rotation	Reversible
Shaft Slinger Indicator	No Slinger
Speed	1725 rpm
Speed Code	Single Speed
Starting Method	Direct on line
Thermal Device - Bearing	None
Thermal Device - Winding	None
Vibration Sensor Indicator	No Vibration Sensor
Winding Thermal 1	None
Winding Thermal 2	None

Nameplate

	NP1256L							
CAT.NO.	L3355							
SPEC.	33-850-918							
HP	.17							
VOLTS	115/230							
AMP	3.6/1.8							
RPM	1725							
FRAME	42	**HZ**	60			**PH**	1	
SER.F.	1.35	**CODE**	L	**DES**	N	**CLASS**	B	
NEMA-NOM-EFF	51	**PF**	62					
RATING	40C AMB-CONT							
CC								
DE	6203	**ODE**	6203					
ENCL	TEFC	**SN**						
	SFA 3.8/1.9							

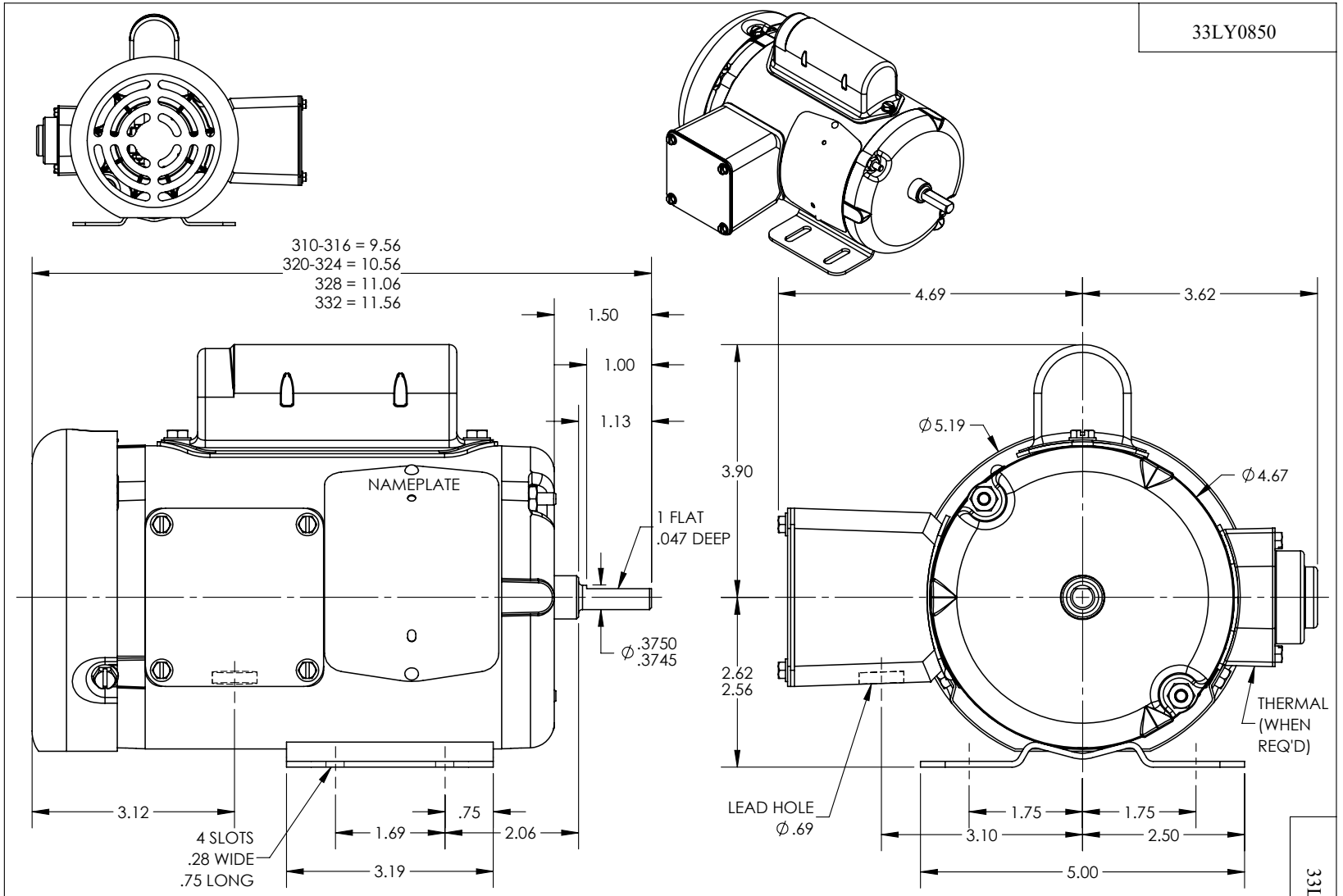
33LY0850
310-316 = 9.56
320-324 = 10.56
328 = 11.06
332 = 11.56
1.50
1.00
1.13
NAMEPLATE
1 FLAT
.047 DEEP
Ø.3750
.3745
3.12
4 SLOTS
.28 WIDE
.75 LONG
1.69
.75
2.06
3.19
4.69
3.62
3.90
Ø5.19
Ø4.67
2.62
2.56
THERMAL
(WHEN
REQ'D)
LEAD HOLE
Ø.69
1.75
1.75
3.10
2.50
5.00
CUSTOMER IS RESPONSIBLE FOR DETERMINING THAT THE PRODUCT WILL PERFORM SUITABLY IN THE INTENDED APPLICATION
REV. DESC: FIX UNDER DEFINED CAM, NO CHANGE TO DRW
REV: R
VERSION: 04
REVISED: 04:28:38 09/09/2022
TDR: 000001194274
BALDOR - RELIANCE®
MODEL NO. 33LY0850
REF: -
BY: ENFRAJ0
STD HORZ MODEL 33L NEMA 42 TEFC
33LY0850

CD0001A10

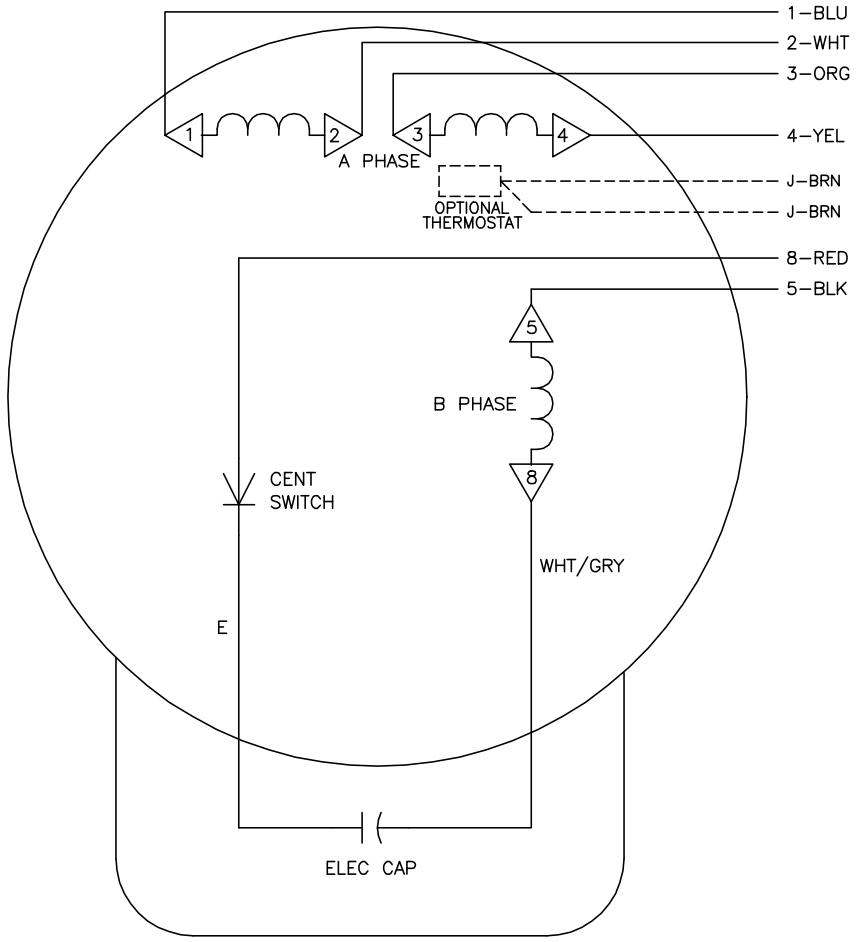

	LINE A	LINE B	JOIN
HIGH STD	1	4,5	2,3,8
HIGH OPP	1	4,8	2,3,5
LOW STD	1,3,8	2,4,5	–
LOW OPP	1,3,5	2,4,8	–

NOTES:

1. STANDARD ROTATION IS CCW FACING LEAD END
2. OPTIONAL THERMOSTAT IS PROVIDED WHEN SPECIFIED.
3. MULTIPLE CAPACITORS ARE CONNECTED IN PARALLEL UNLESS OTHERWISE SPECIFIED.
4. LEAD COLORS ARE OPTIONAL. LEADS MUST ALWAYS BE NUMBERED AS SHOWN.
5. (#) = MAGNET WIRE COIL END WITH I.D. NUMBER

CD0001A10

REV. DESC: NEW			**Baldor • Dodge • Reliance**
REV. LTR: –	VERSION: 00	TDR: 000000435106	
CD0001A10	FILE: \CKA\00032\277	REVISED: 10:15:16 06/19/2007	TYPE L, DV, REV, 6 LD, CK
	MTL: –	BY: CKNATL0	